VELUX®

HFC/HVC + ERC

25°-40°

VAS 452997-2015-04

A1-R

HVC CE all

HFC/HVC + ERC

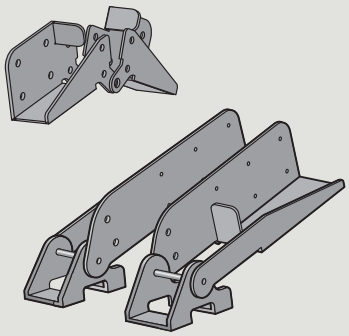

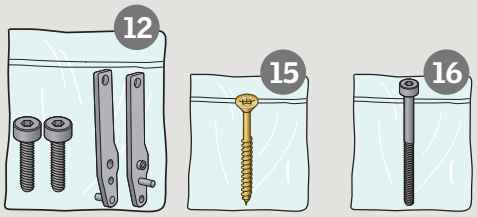

M8 x 20 mm | 4 x 40 mm | M8 x 80 mm

A2-R

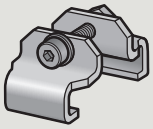

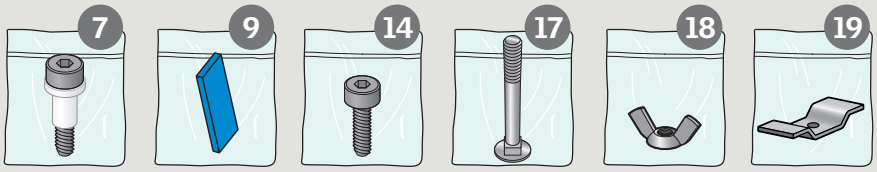

M8 x 30 mm | M8 x 14 mm | M8 x 60 mm | M6

A3-R

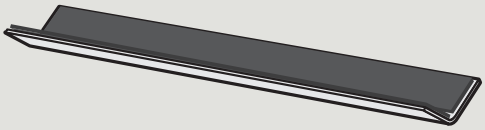

B1-R

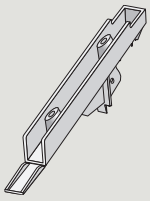

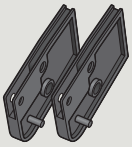

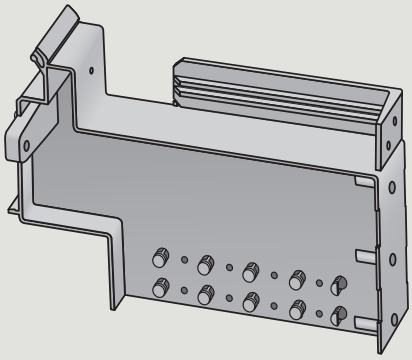

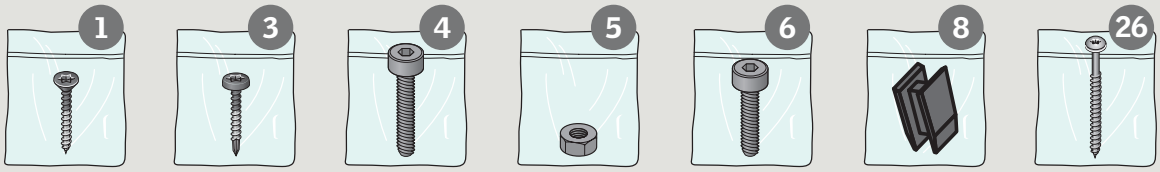

4,2 x 25 mm | 4,2 x 25 mm | M6 x 35 mm | M6 | M8 x 30 mm | 4 x 50 mm

C1-R

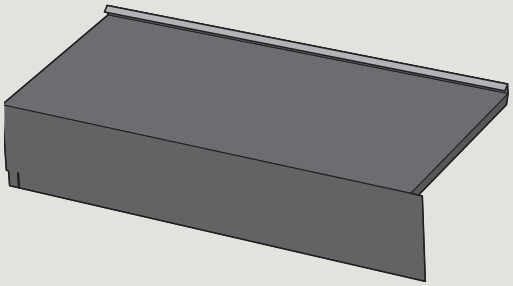

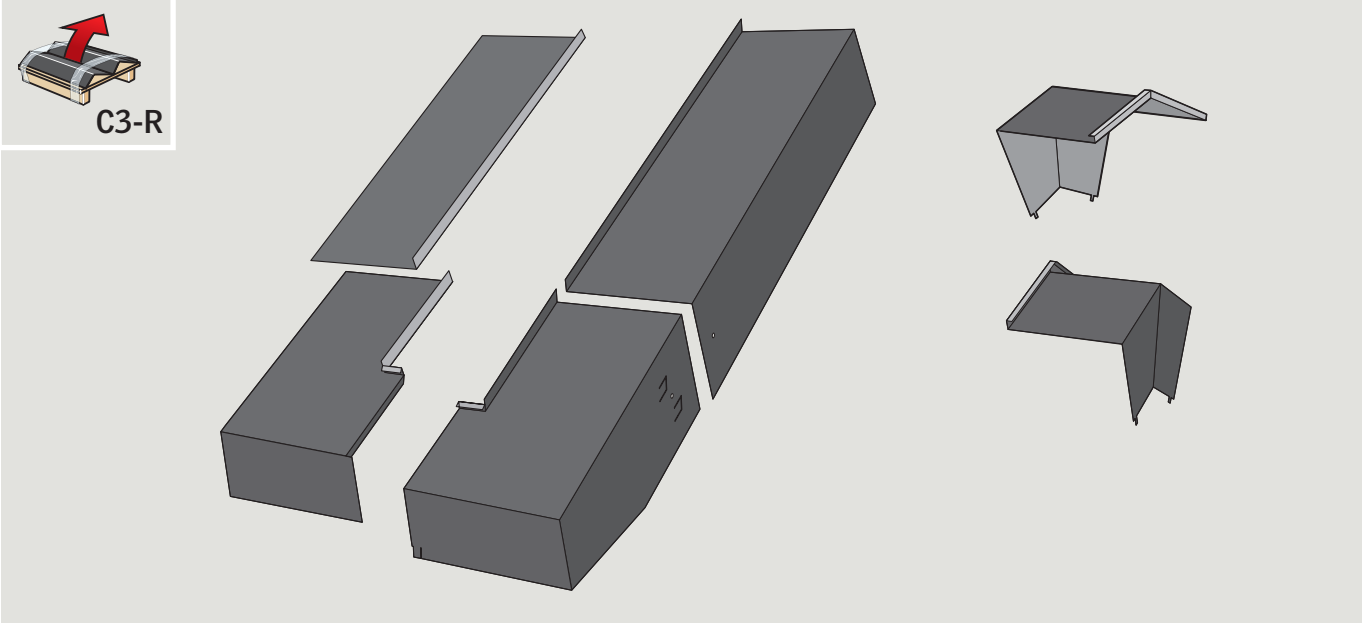
C3-R

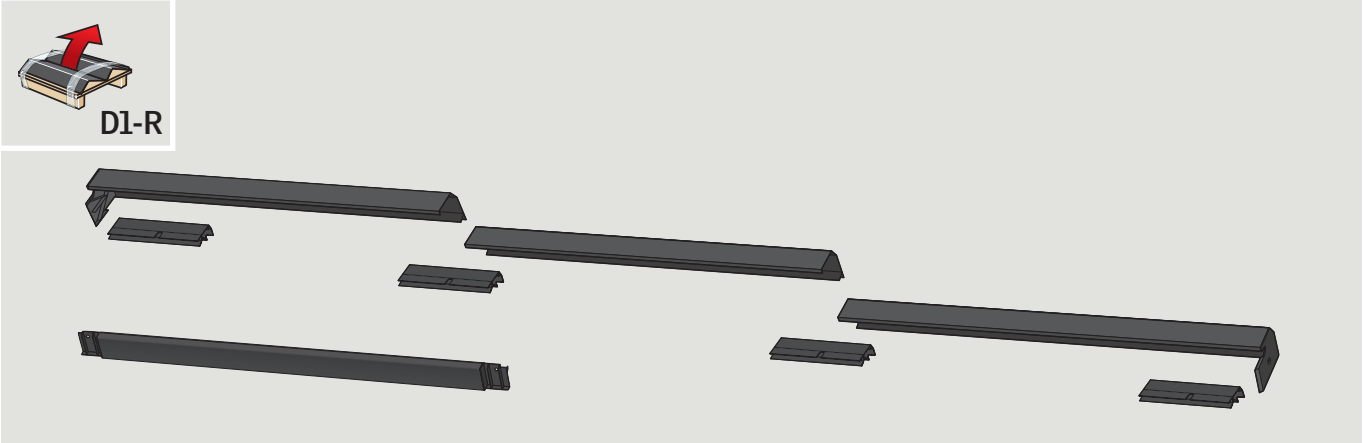
D1-R

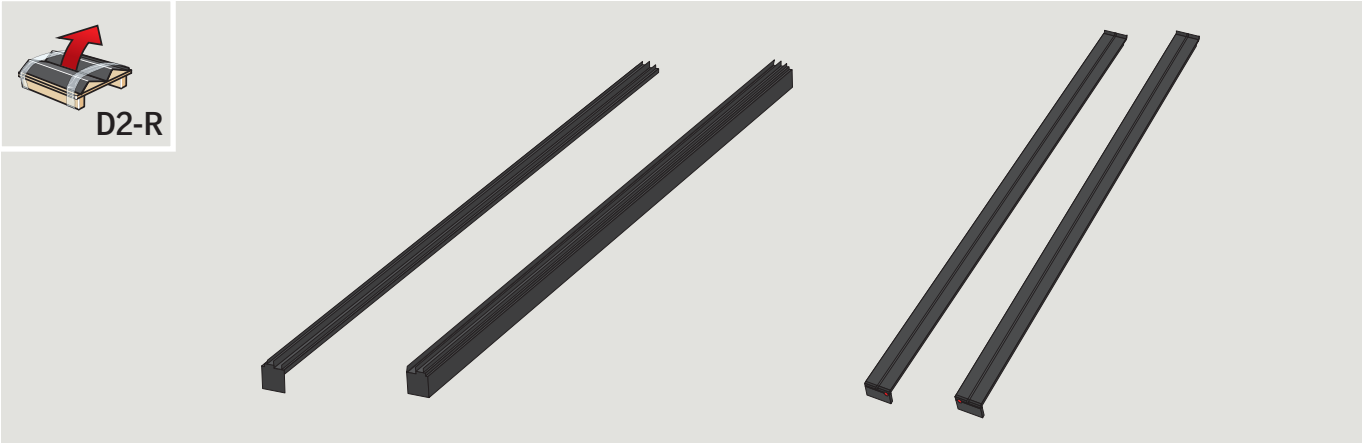
D2-R

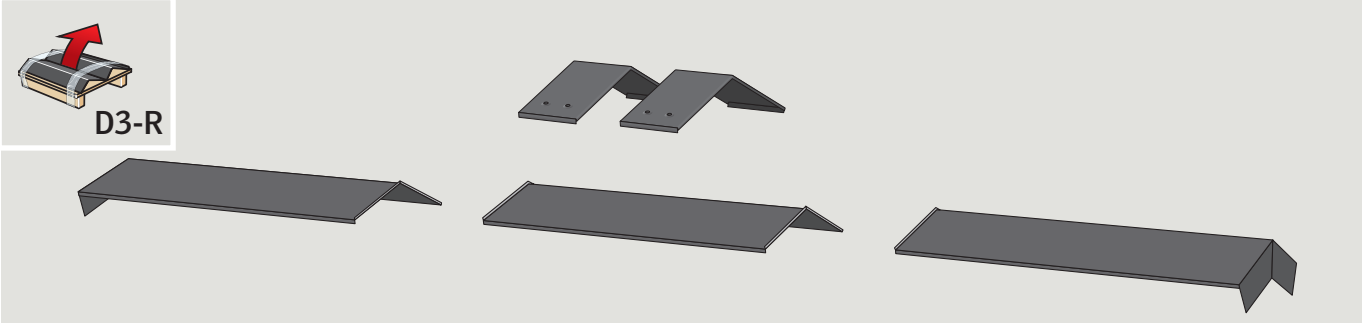
D3-R

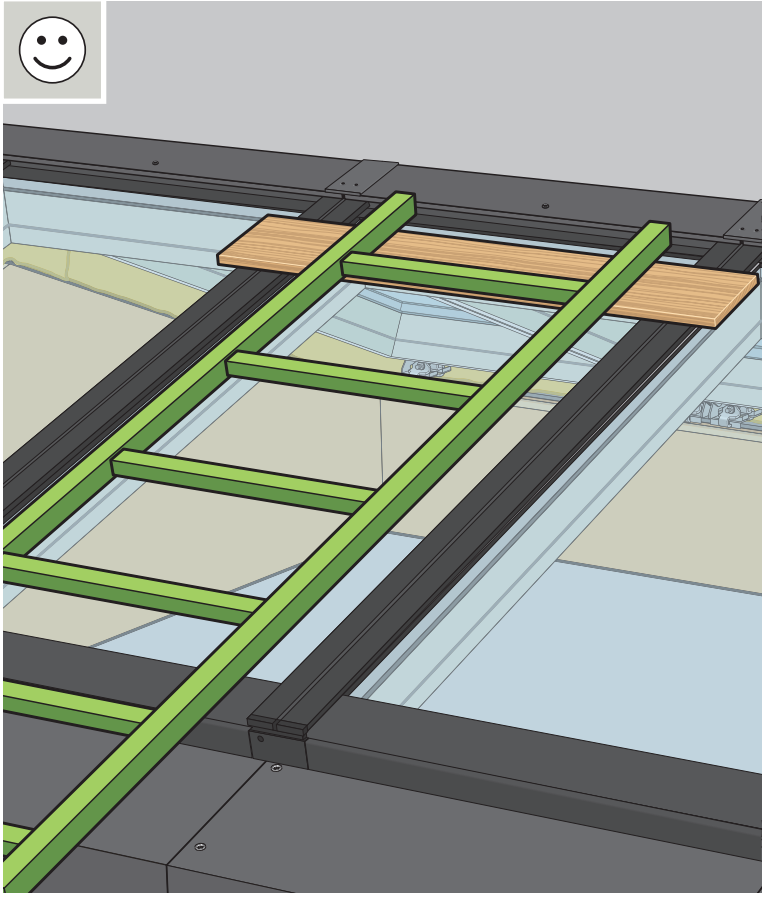

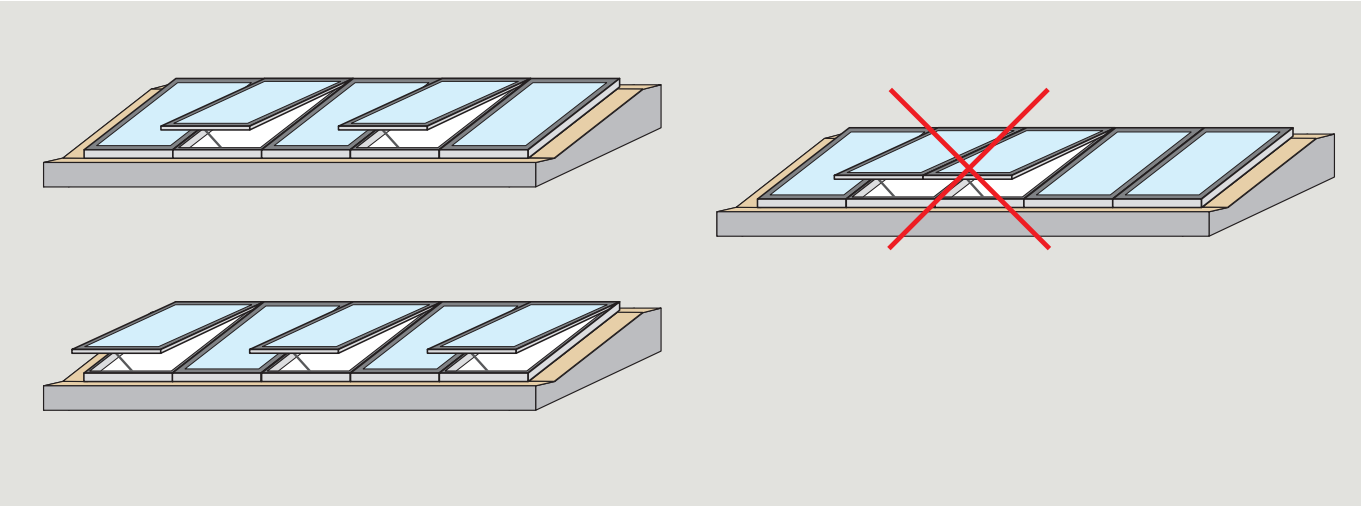

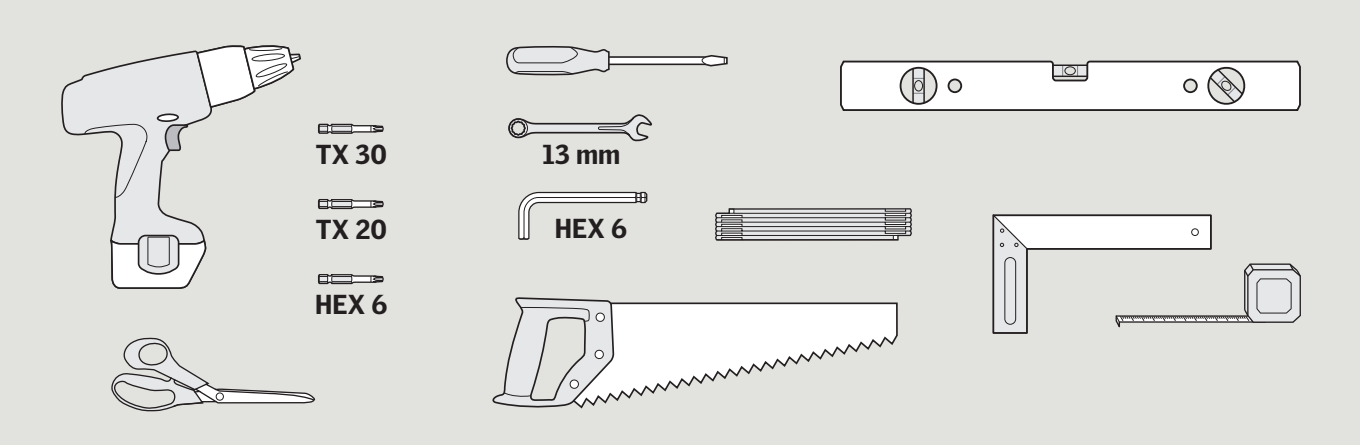
TX 30
TX 20
HEX 6
13 mm
HEX 6

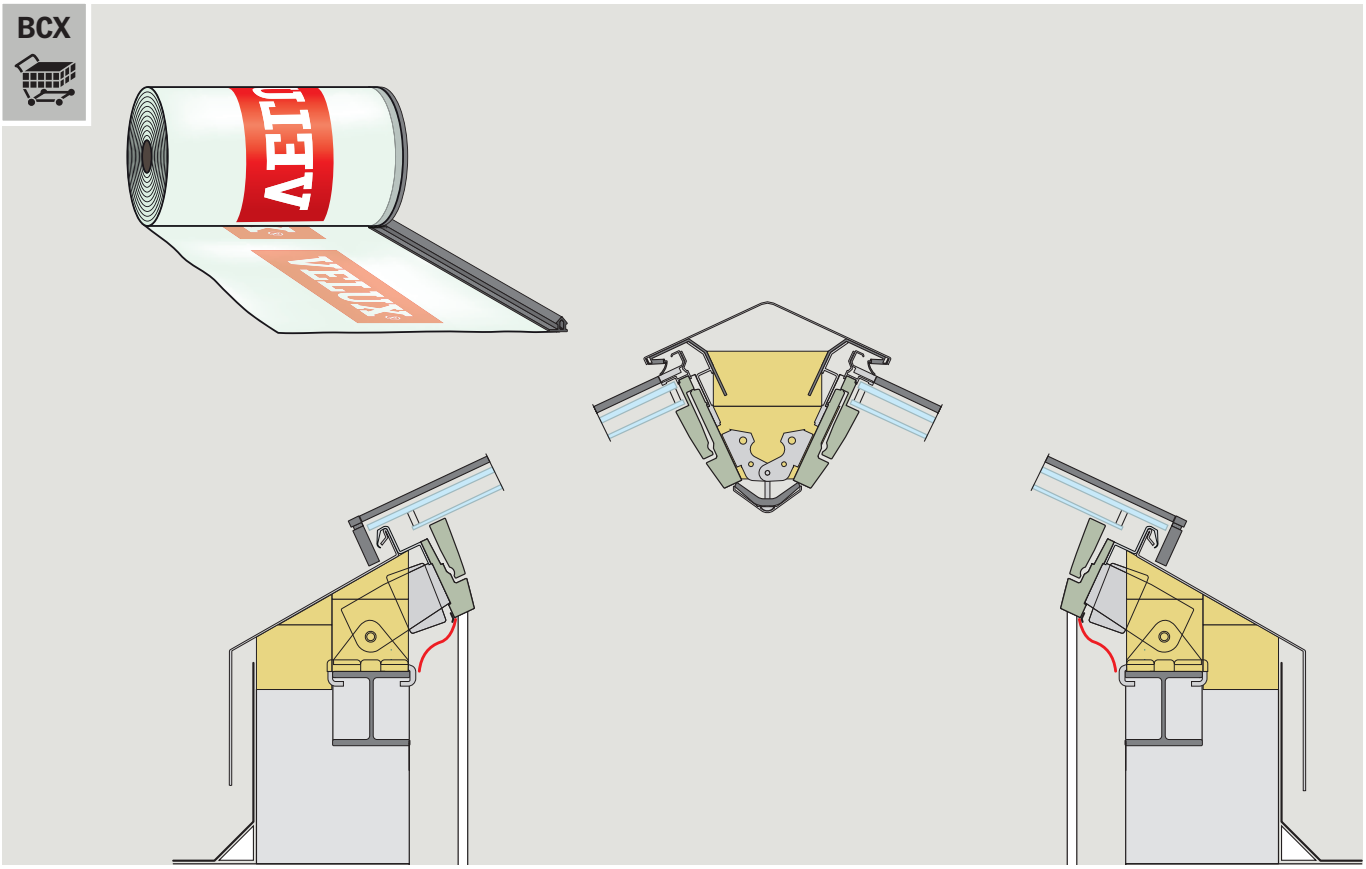
BCX

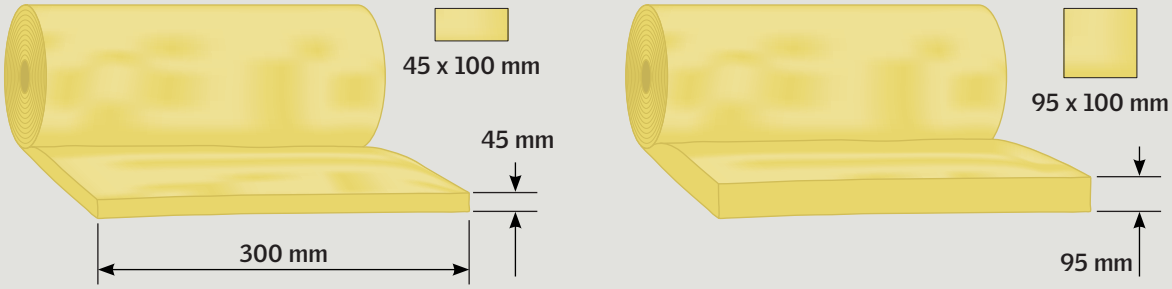
45 x 100 mm
45 mm
300 mm
95 x 100 mm
95 mm

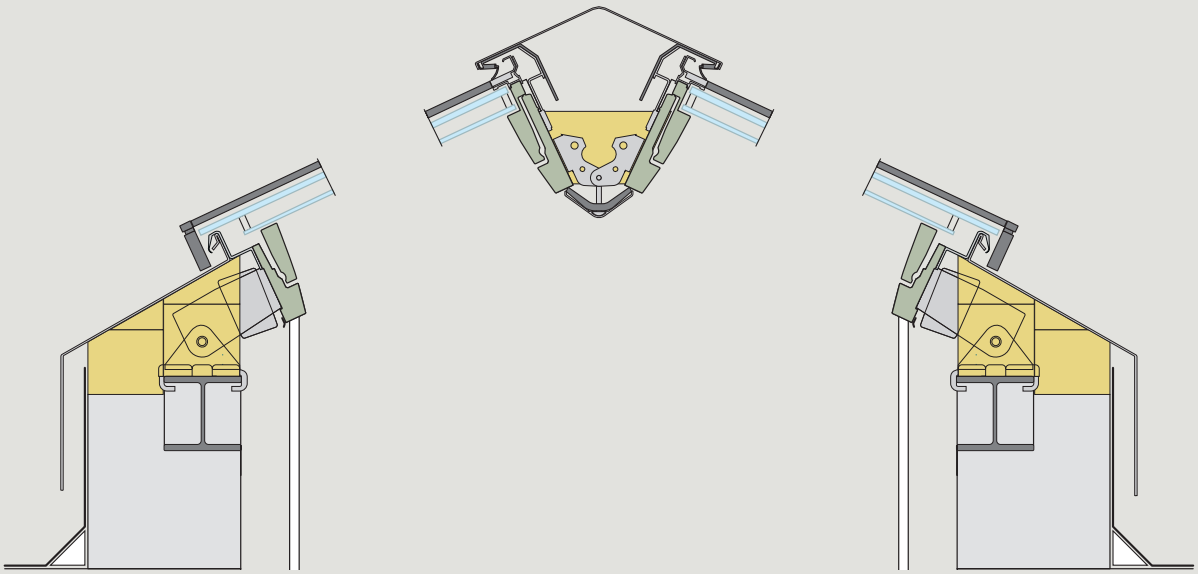

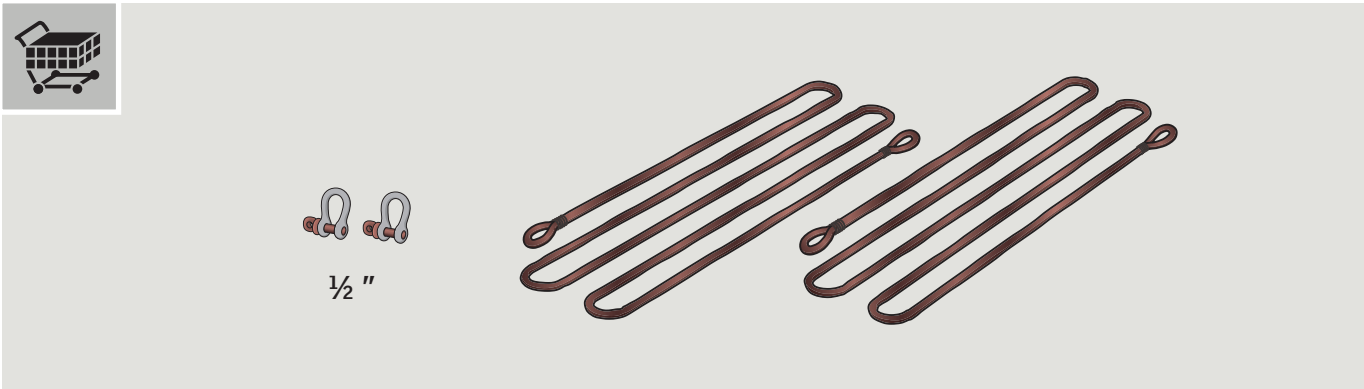
½ ″

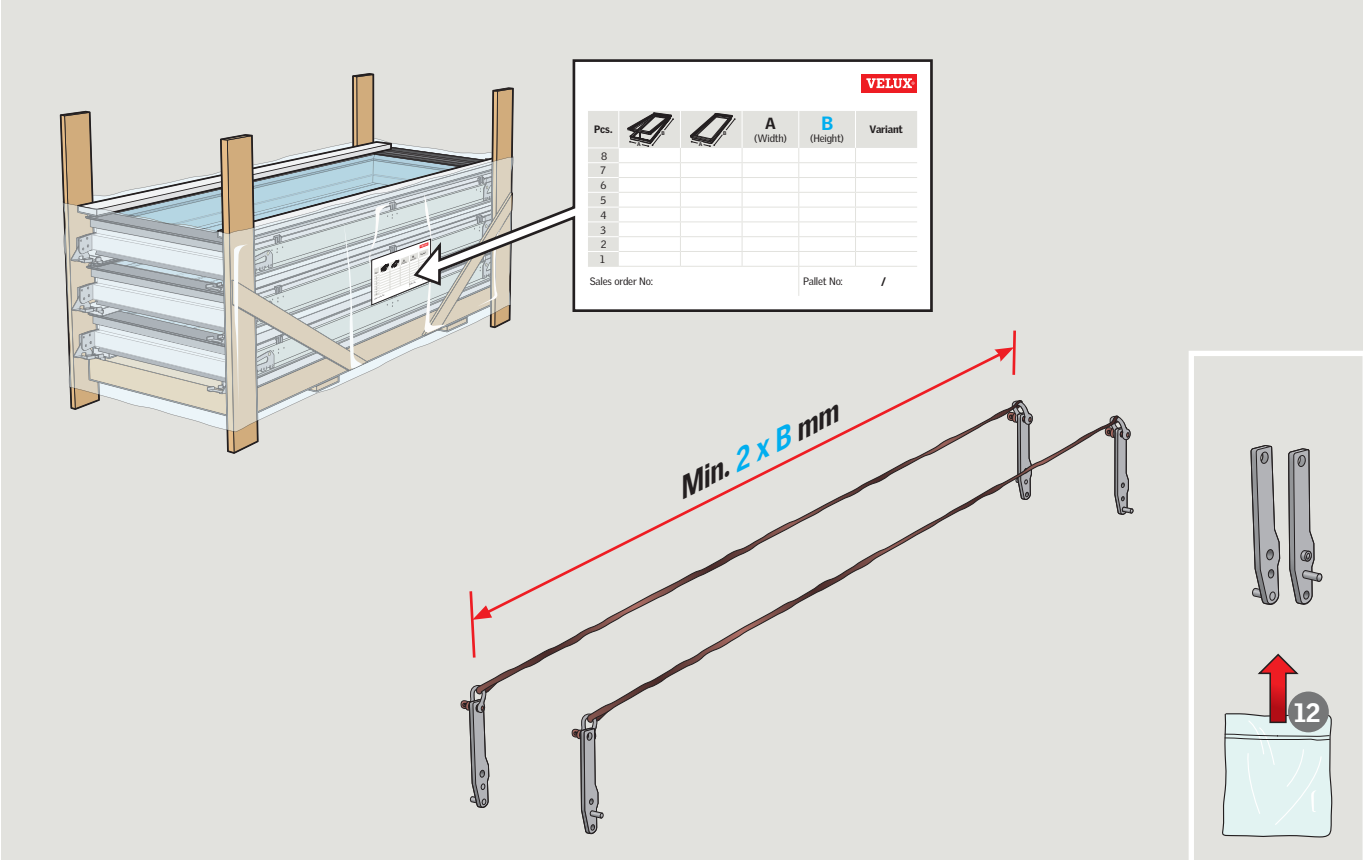
VELUX
Pcs.
A
(Width)
B
(Height)
Variant
8
7
6
5
4
3
2
1
Sales order No:
Pallet No:
/
Min. 2 x B mm
12

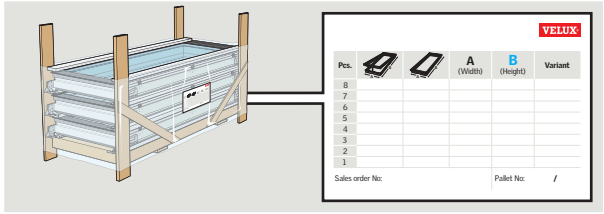
VELUX
Pcs.
A
(Width)
B
(Height)
Variant
8
7
6
5
4
3
2
1
Sales order No:
Pallet No:
/

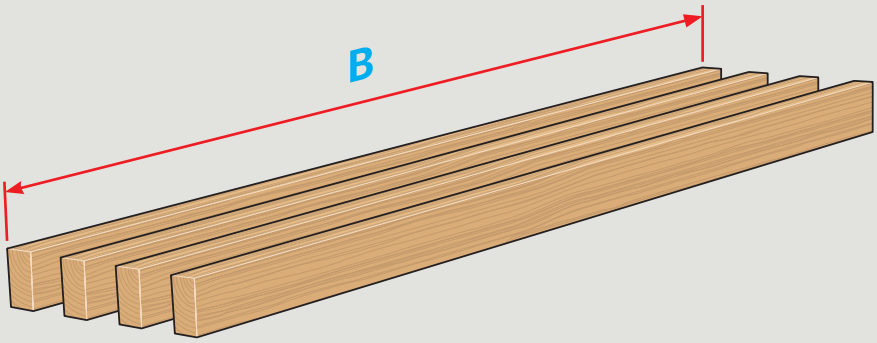
B

45 x 95 mm

1

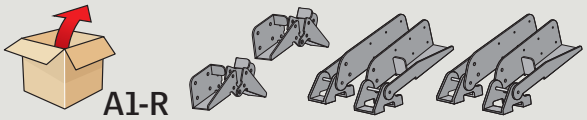
A1-R

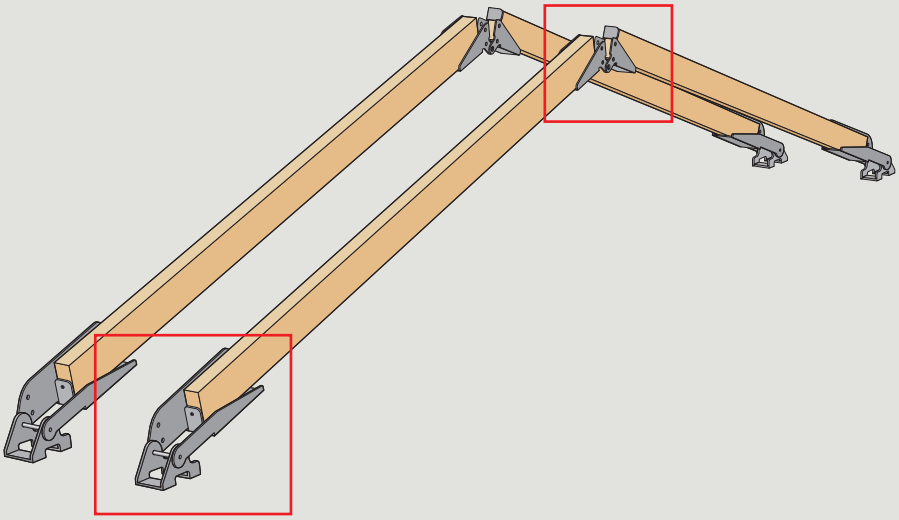

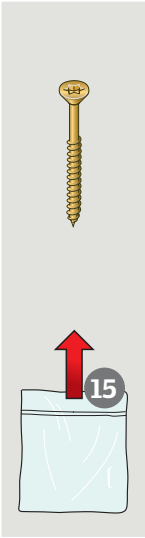
15

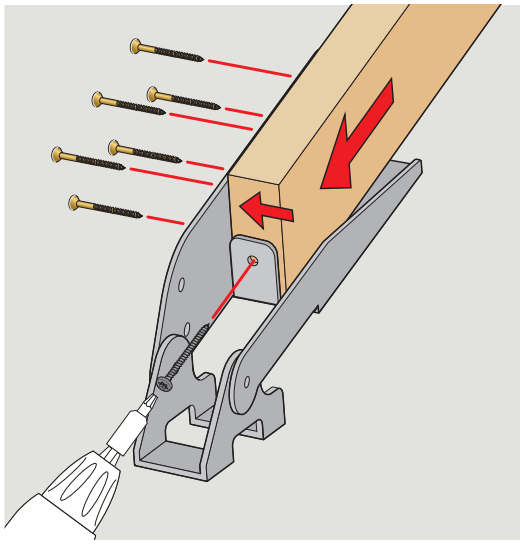

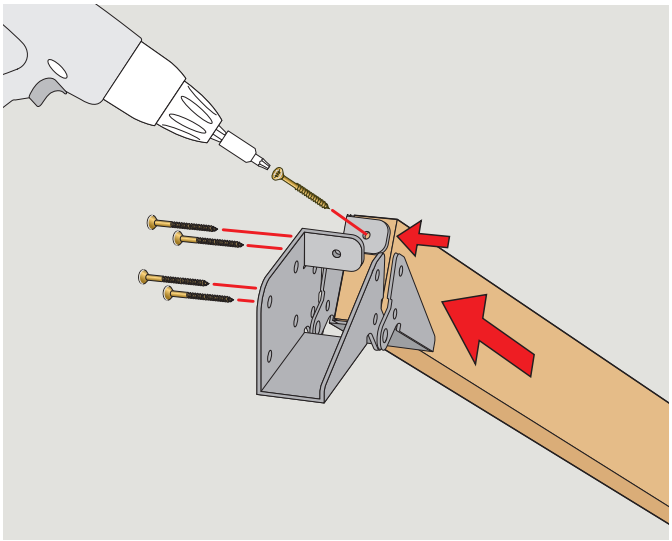

2a

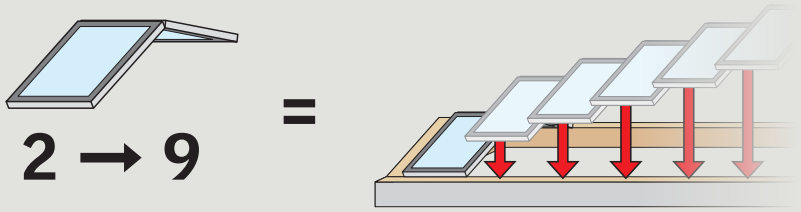

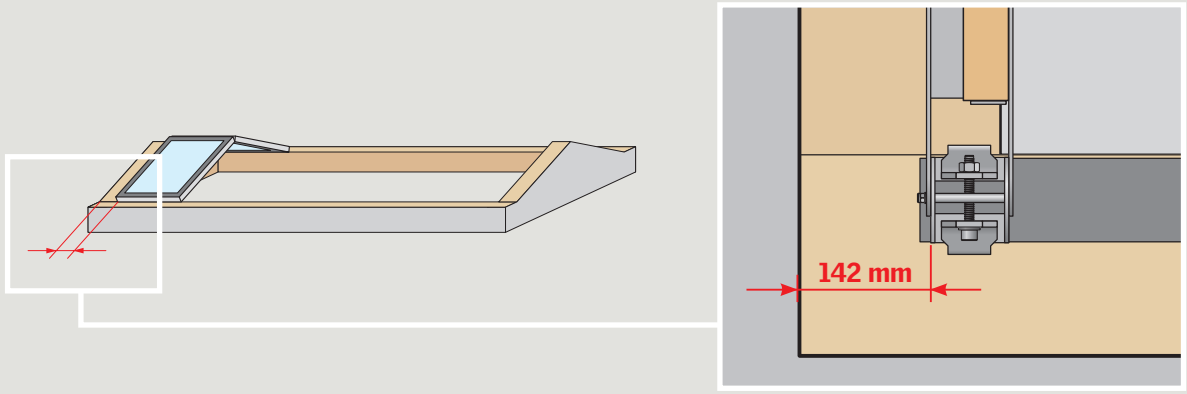

2b

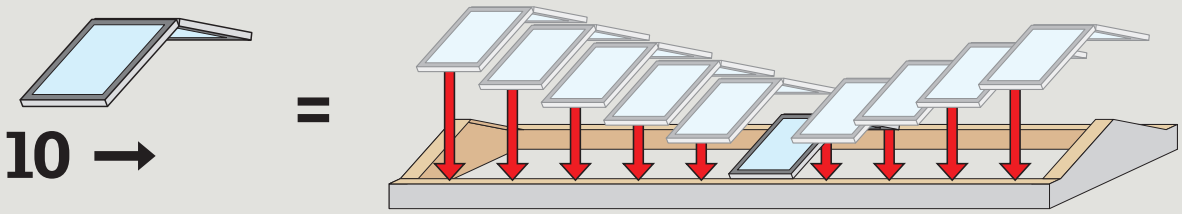

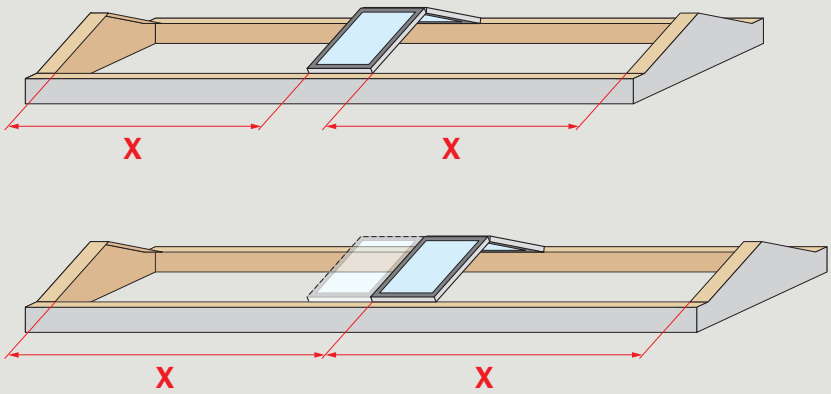

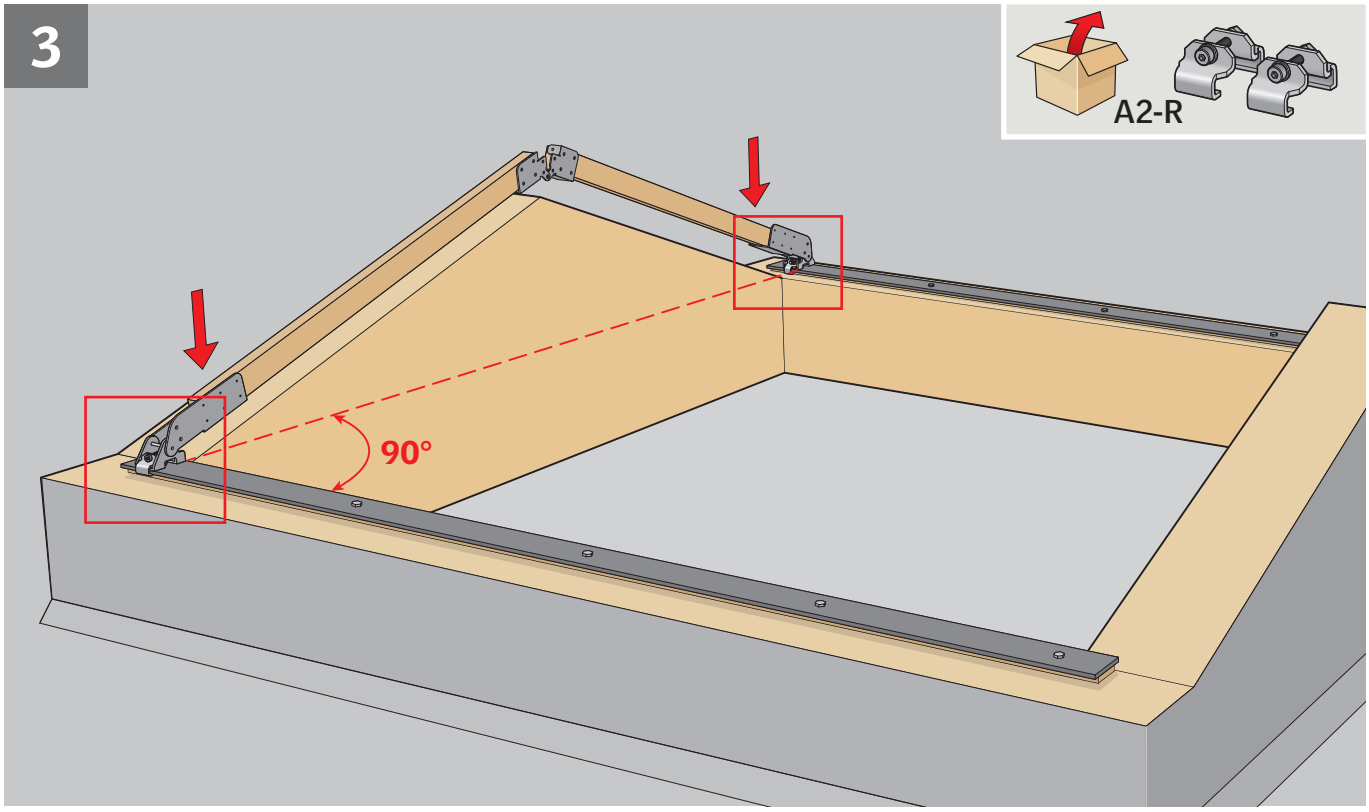
3
A2-R
90°

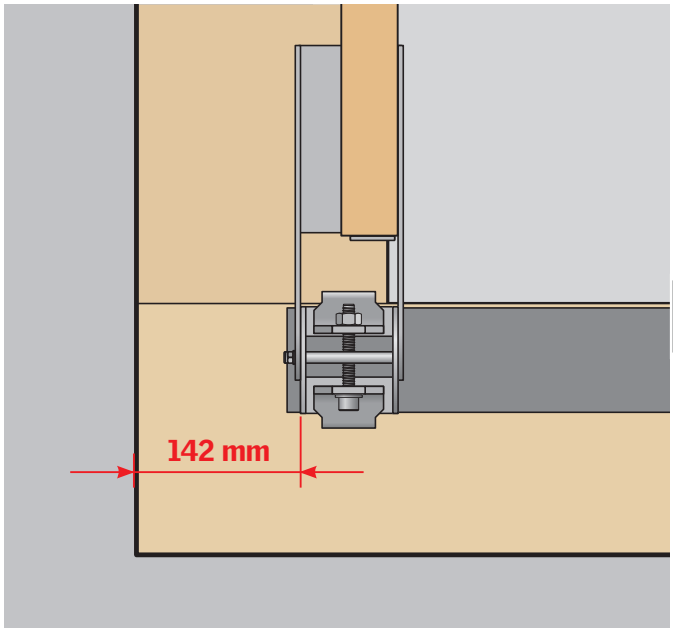
142 mm

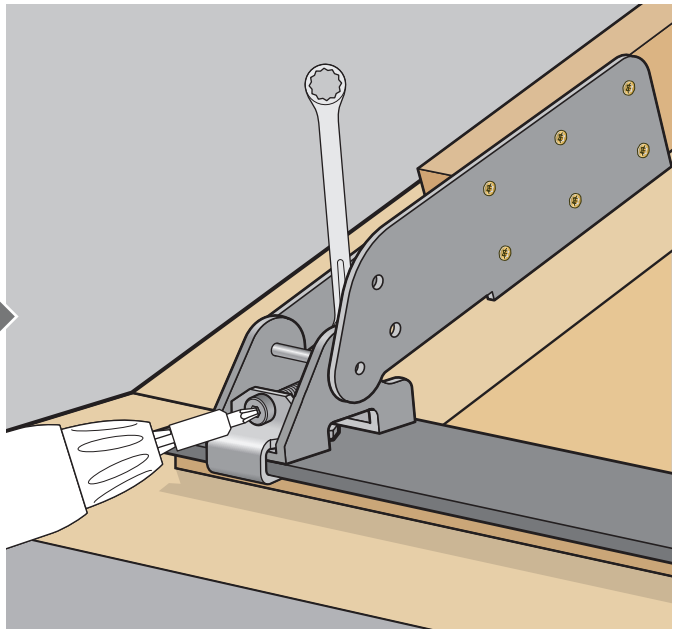

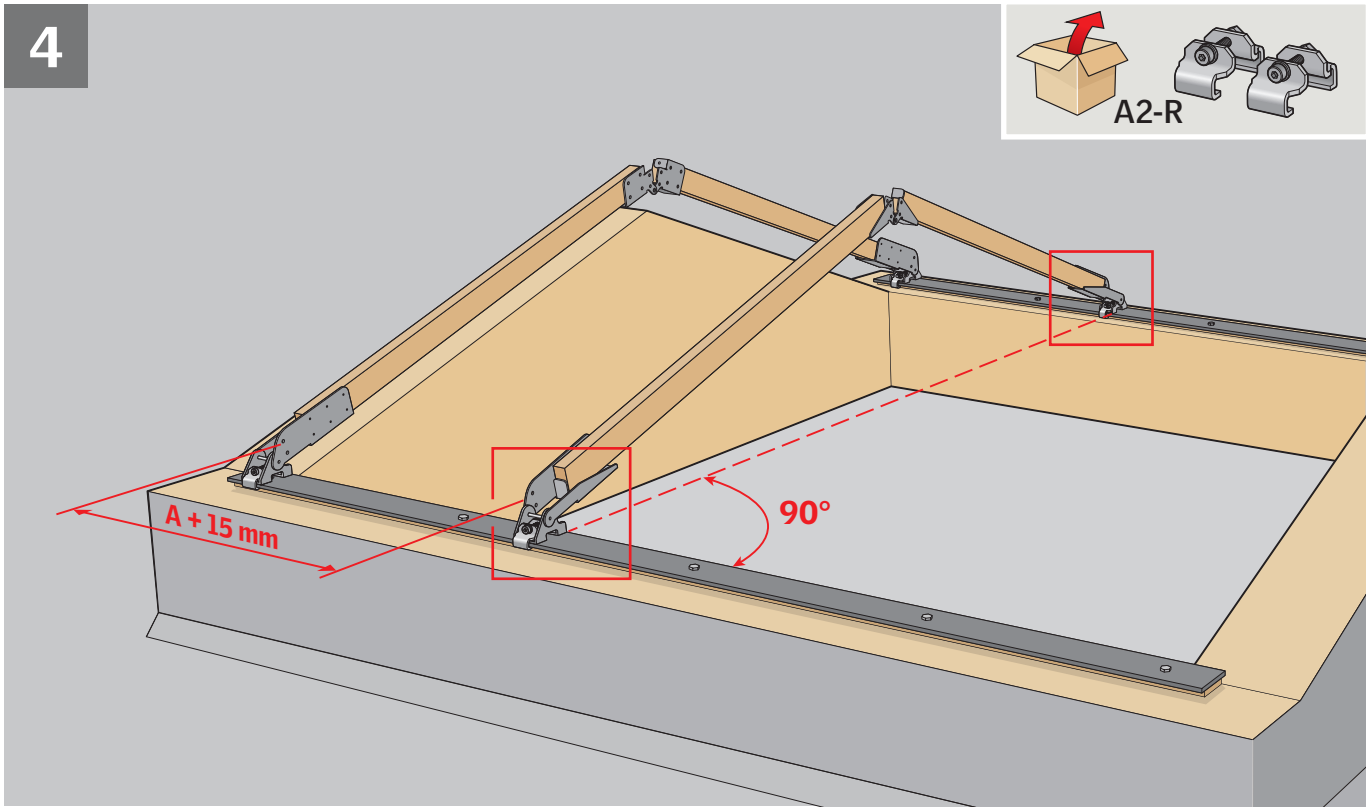
4
A2-R
A + 15 mm
90°

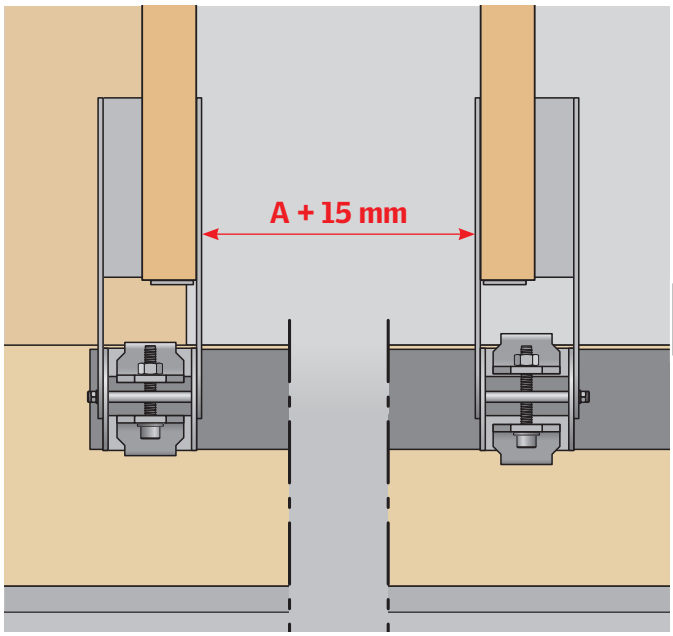
A + 15 mm

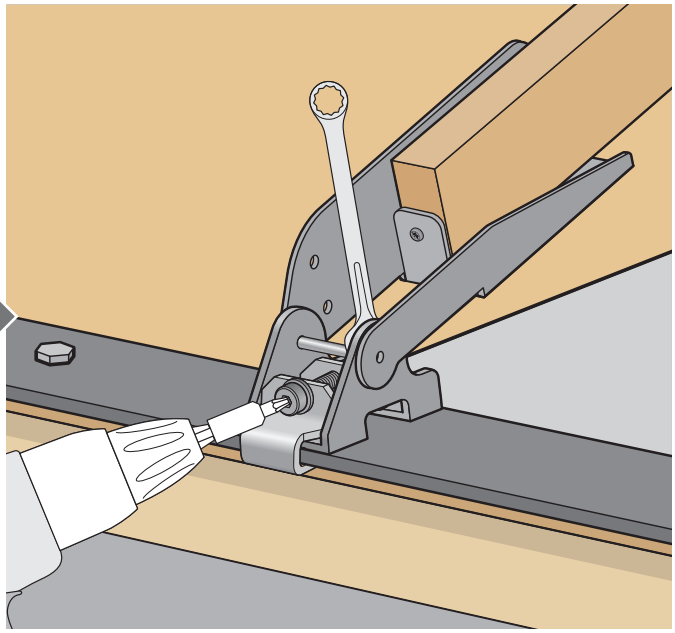

5

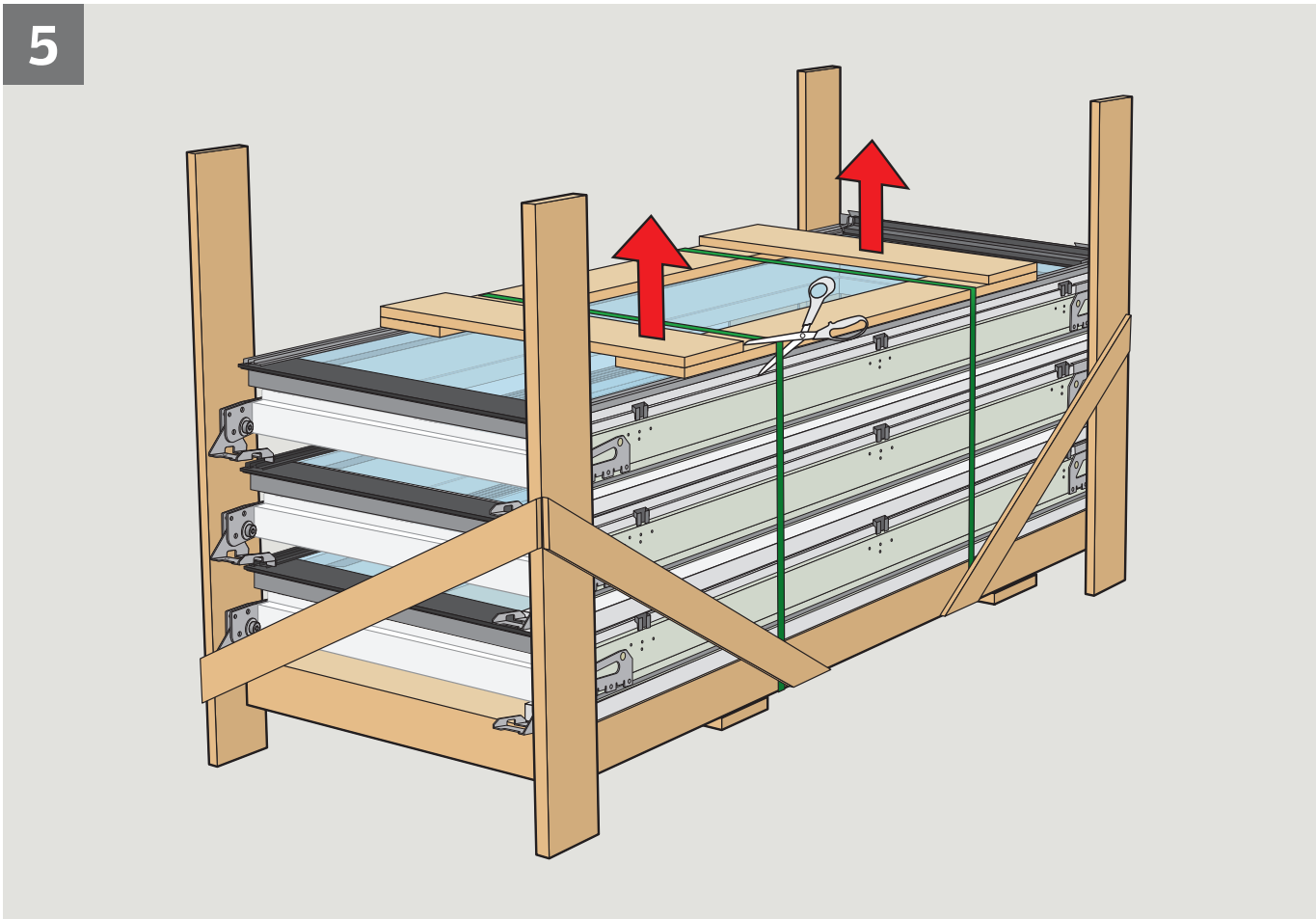

6

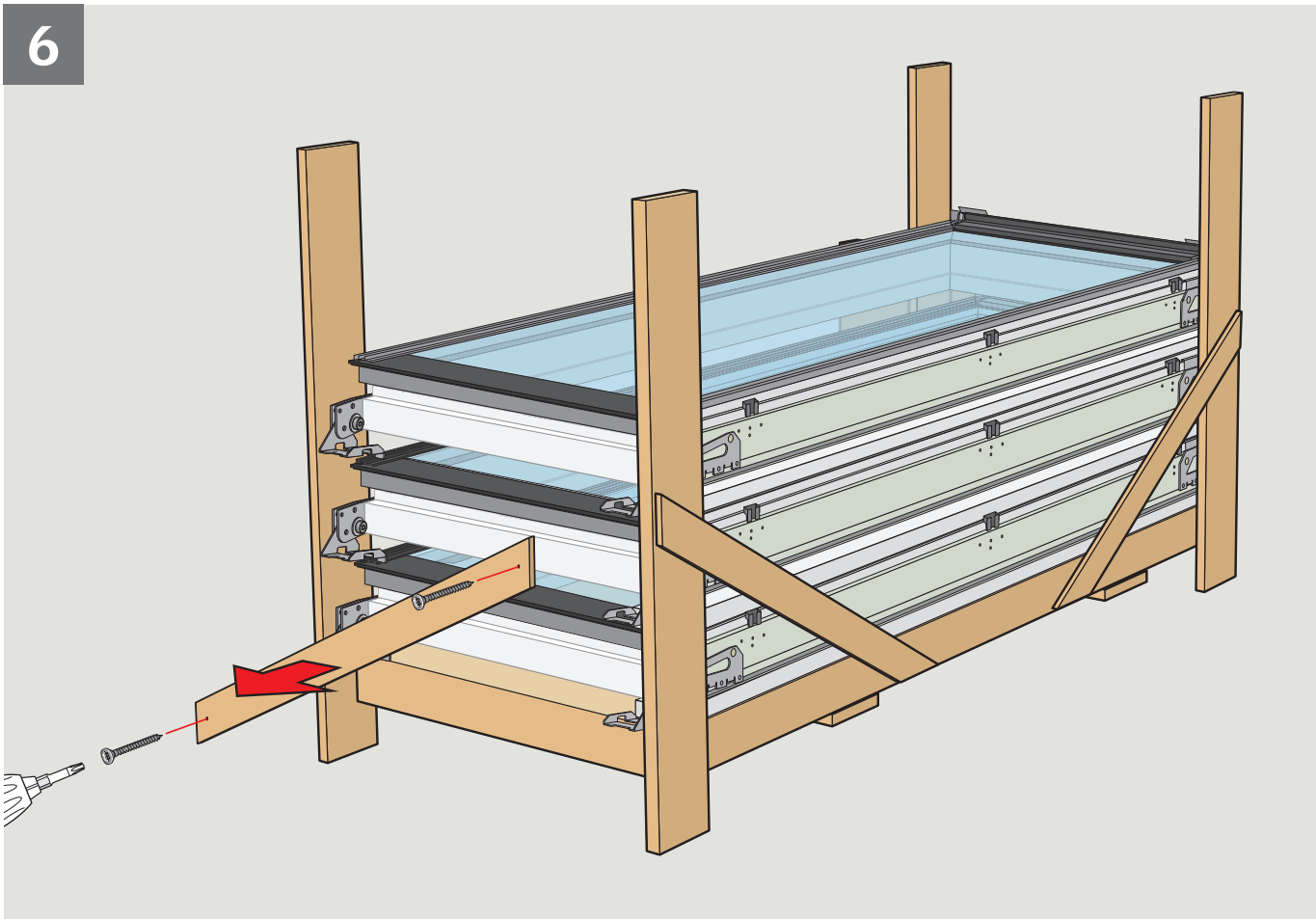

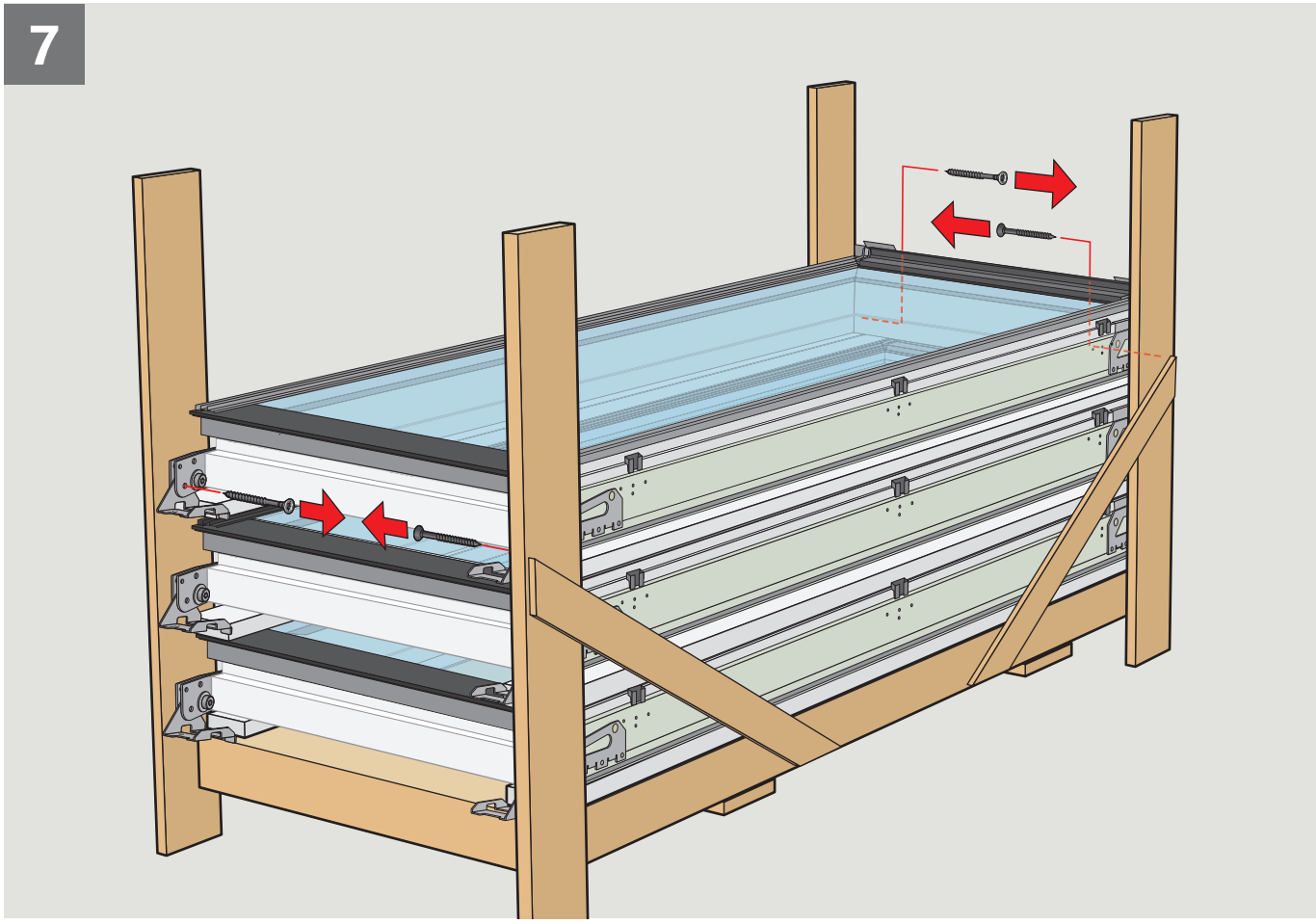
7

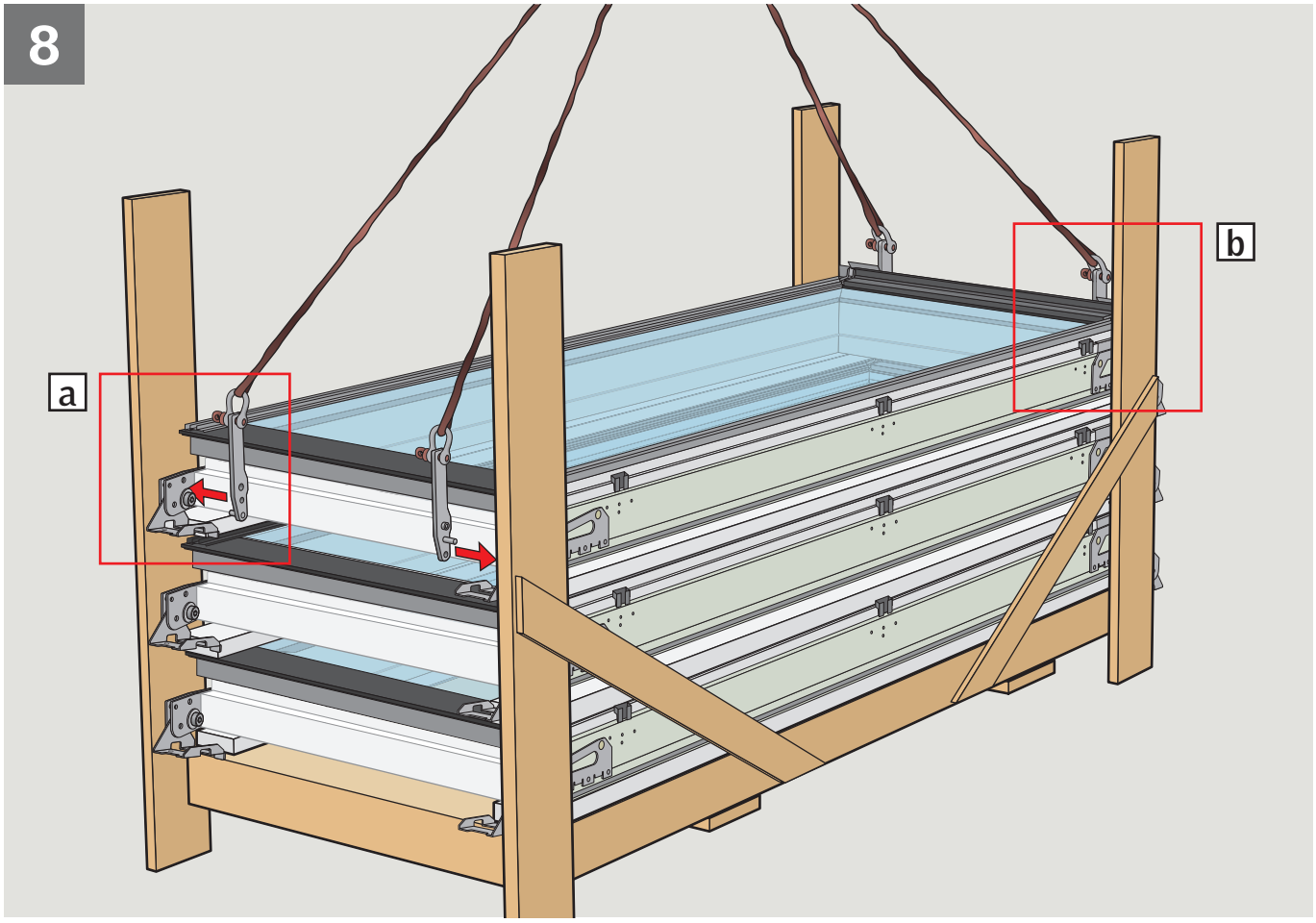
8
a
b

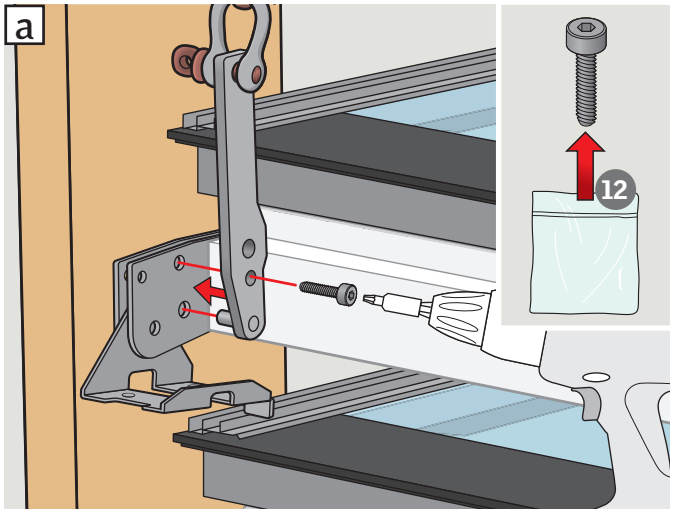
a
12

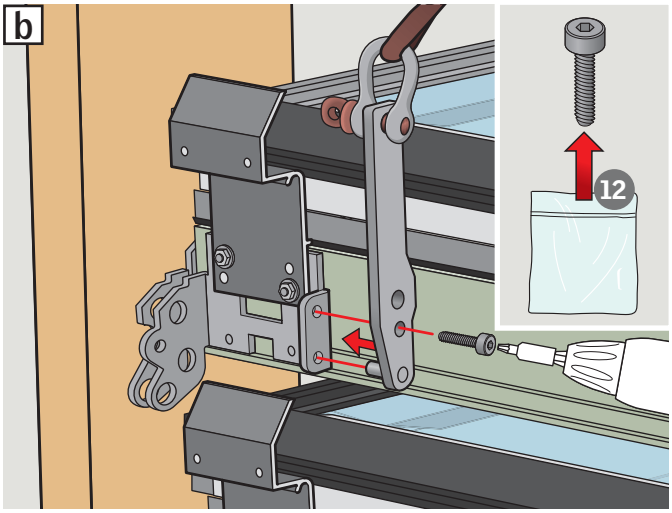
b
12

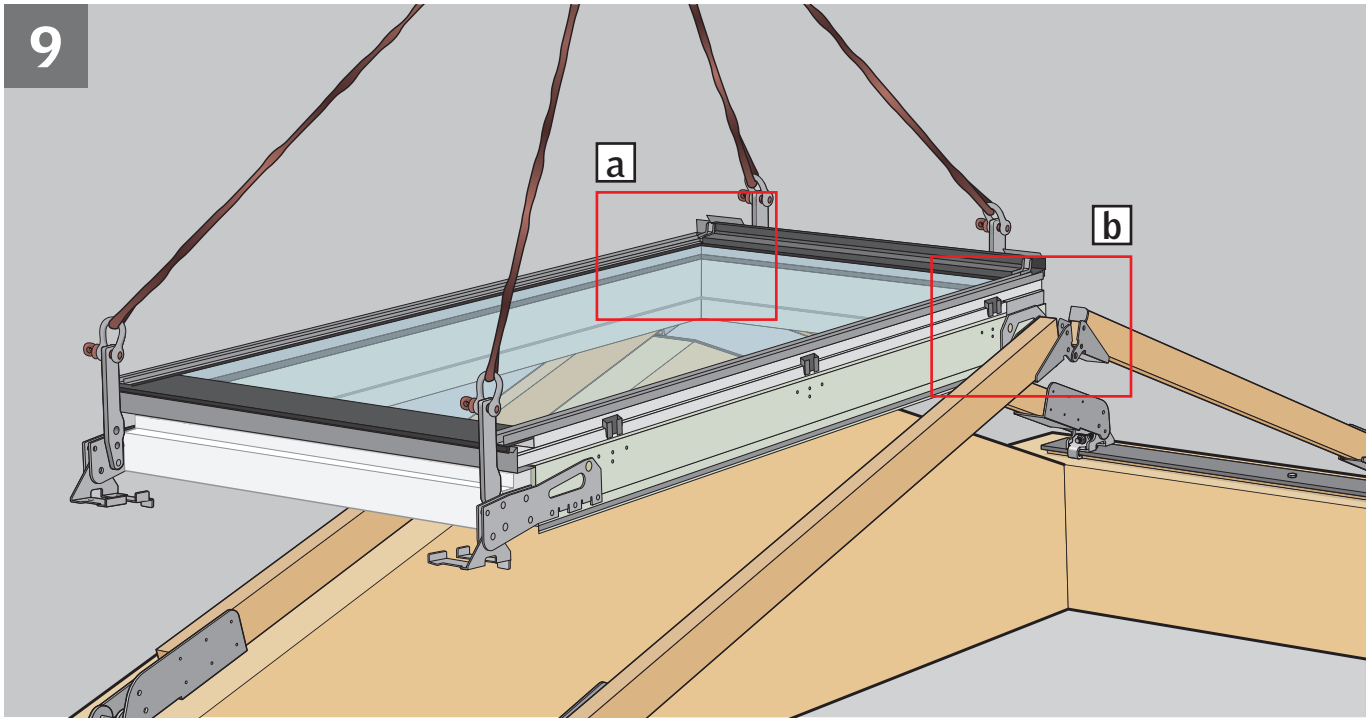
9
a
b

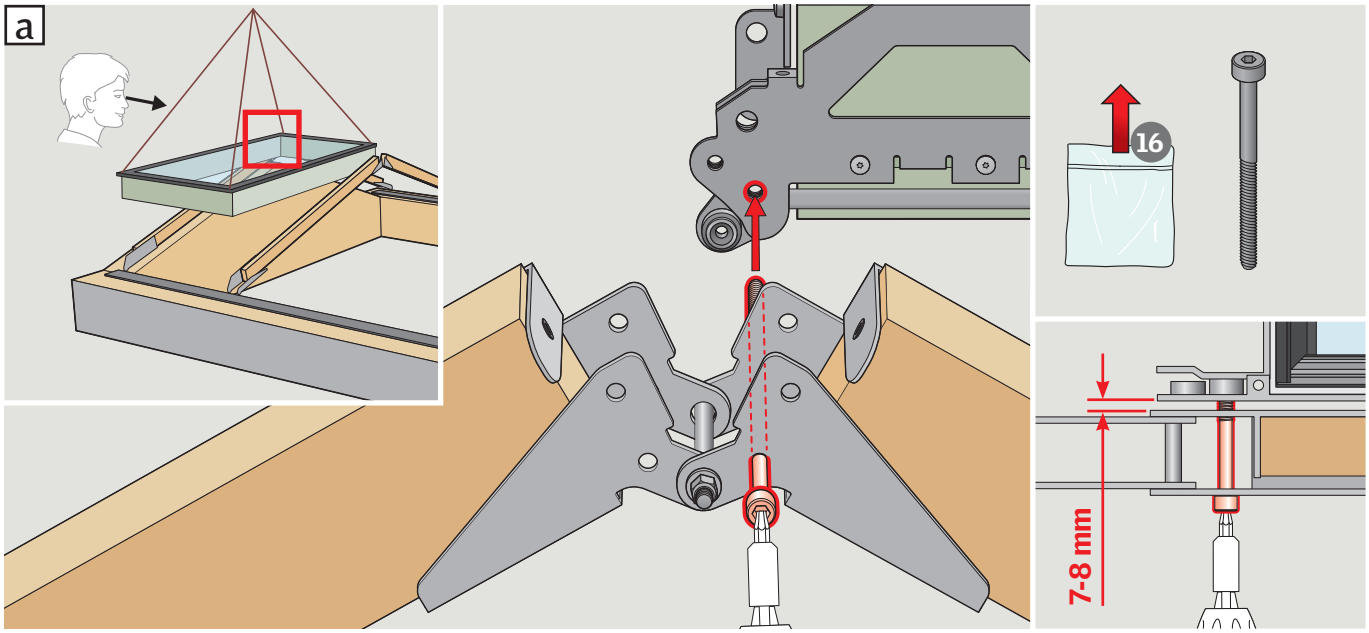
a
16
7-8 mm

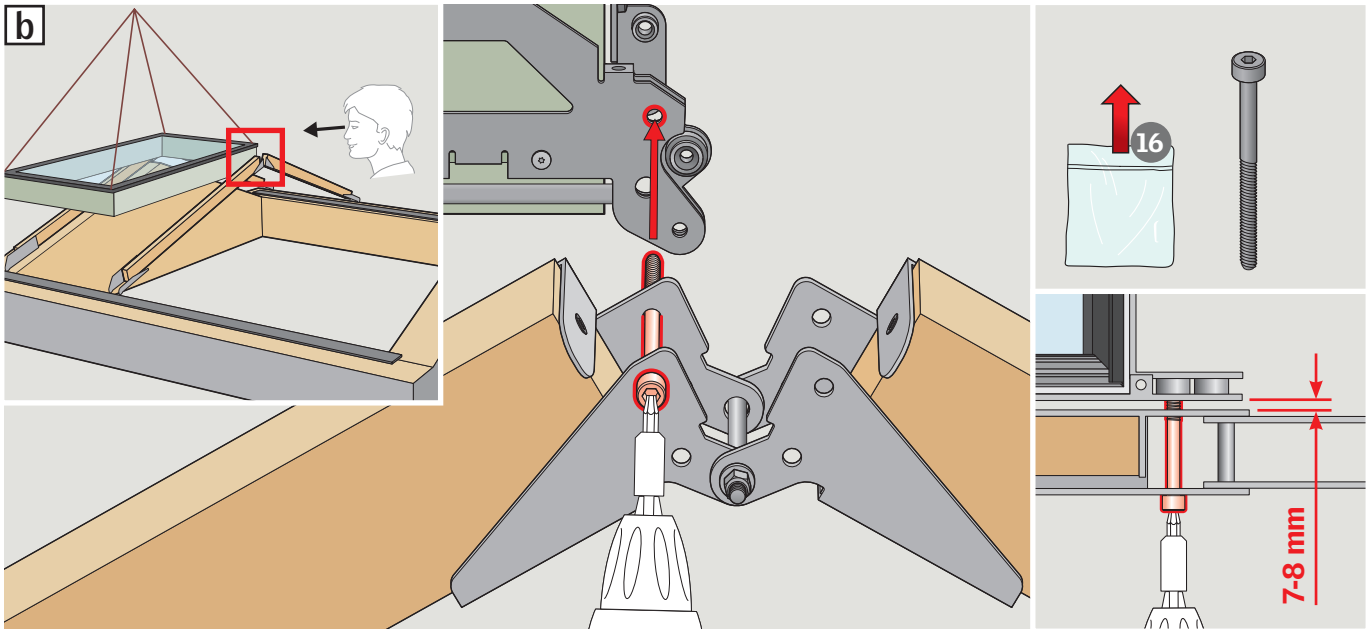
b
16
7-8 mm

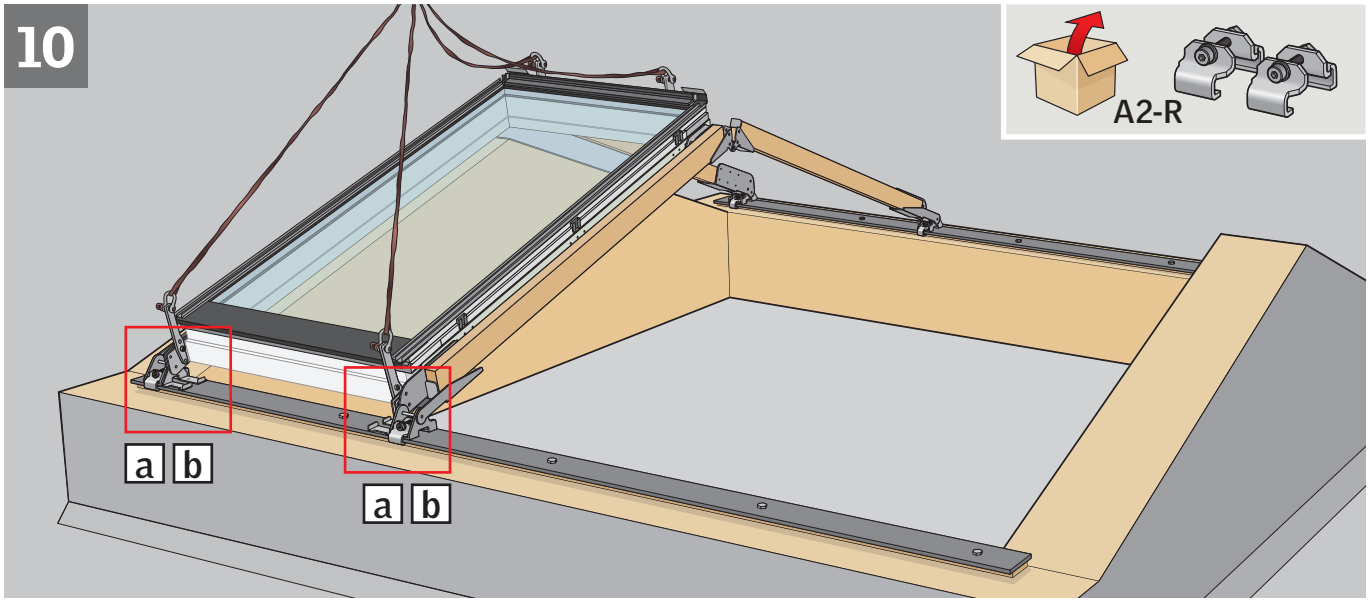
10
A2-R
a
b
a
b

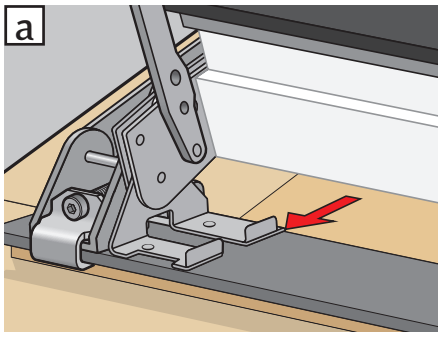
a

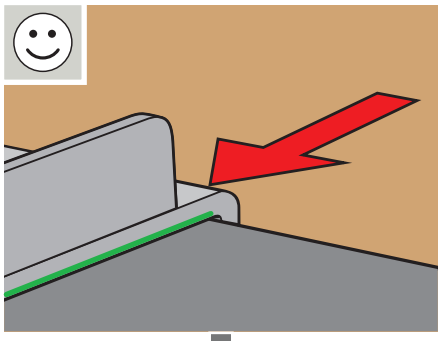

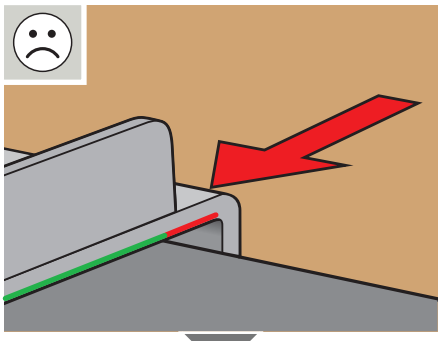

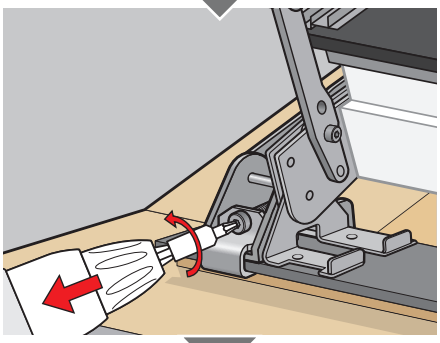

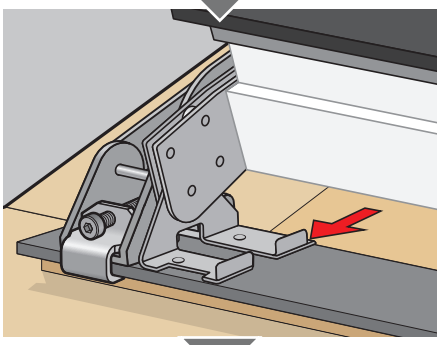

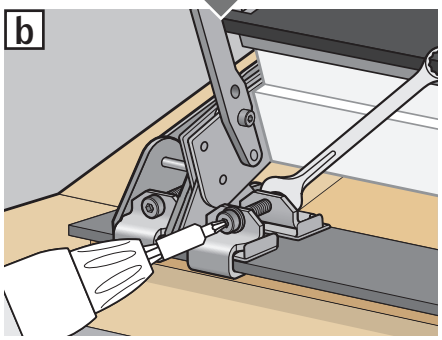
b

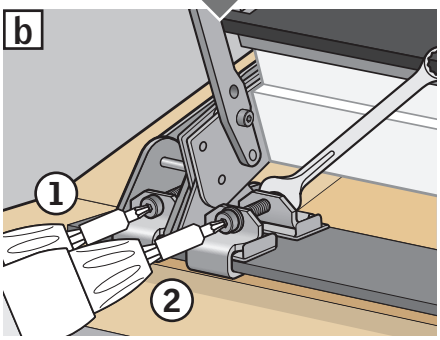
b
1
2

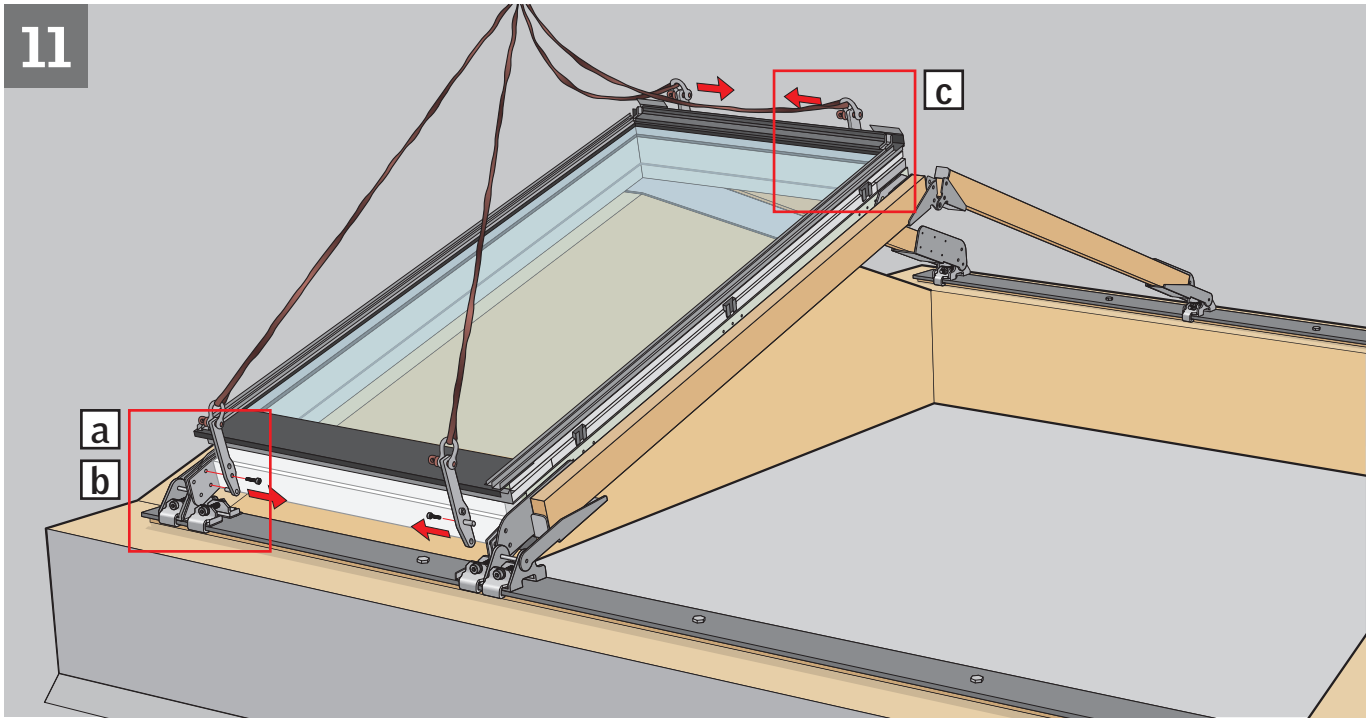
11
a
b
c

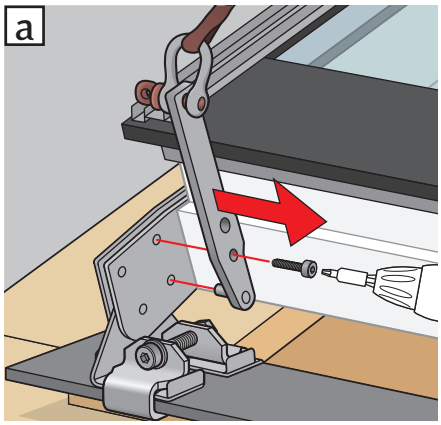
a

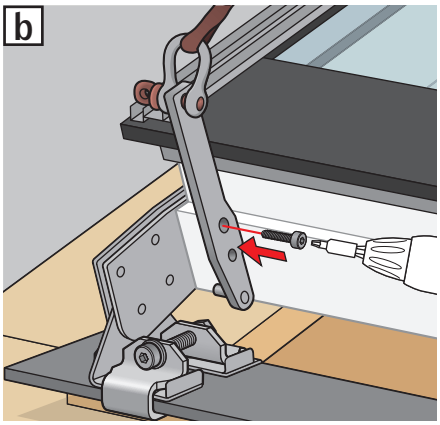
b

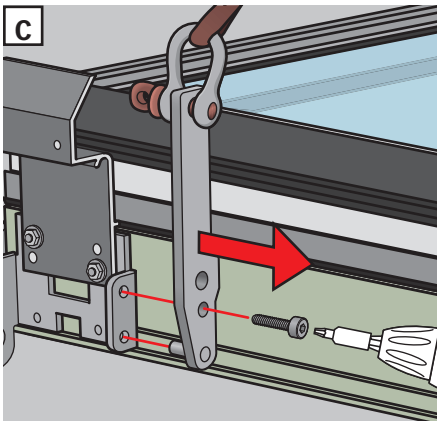
c

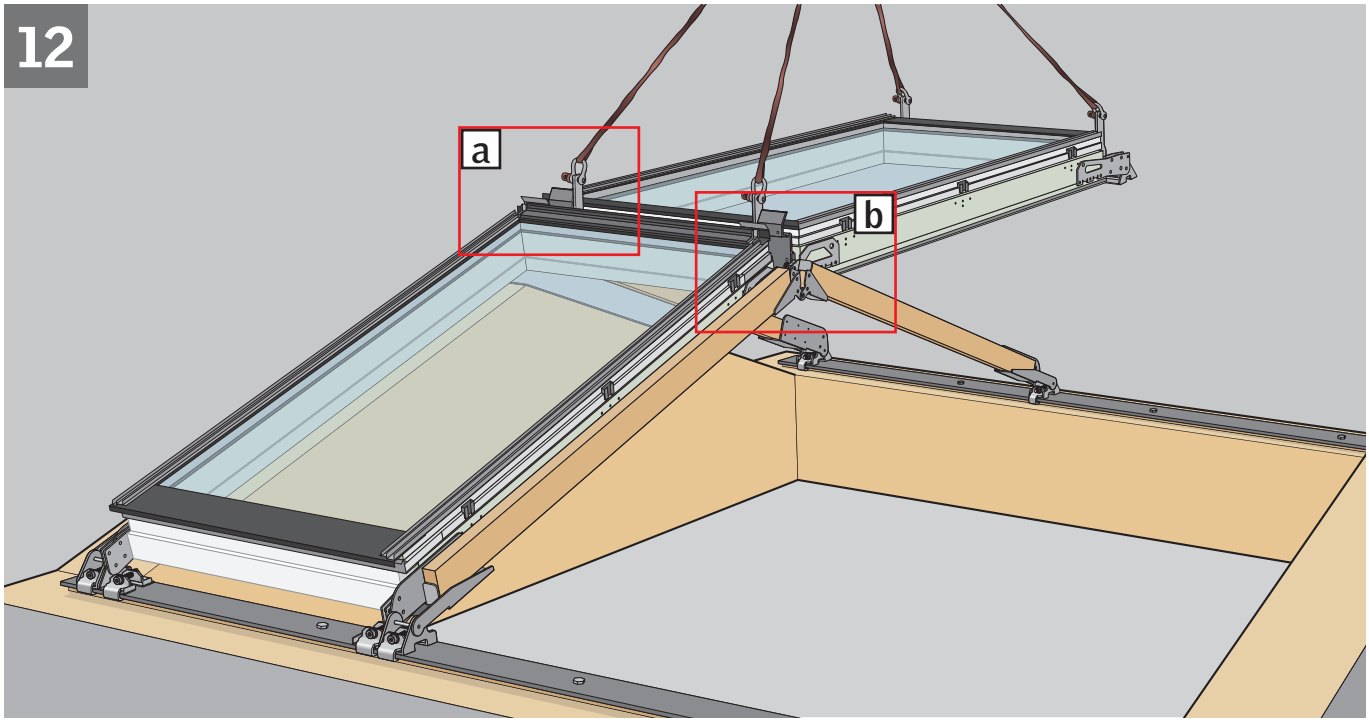
12
a
b

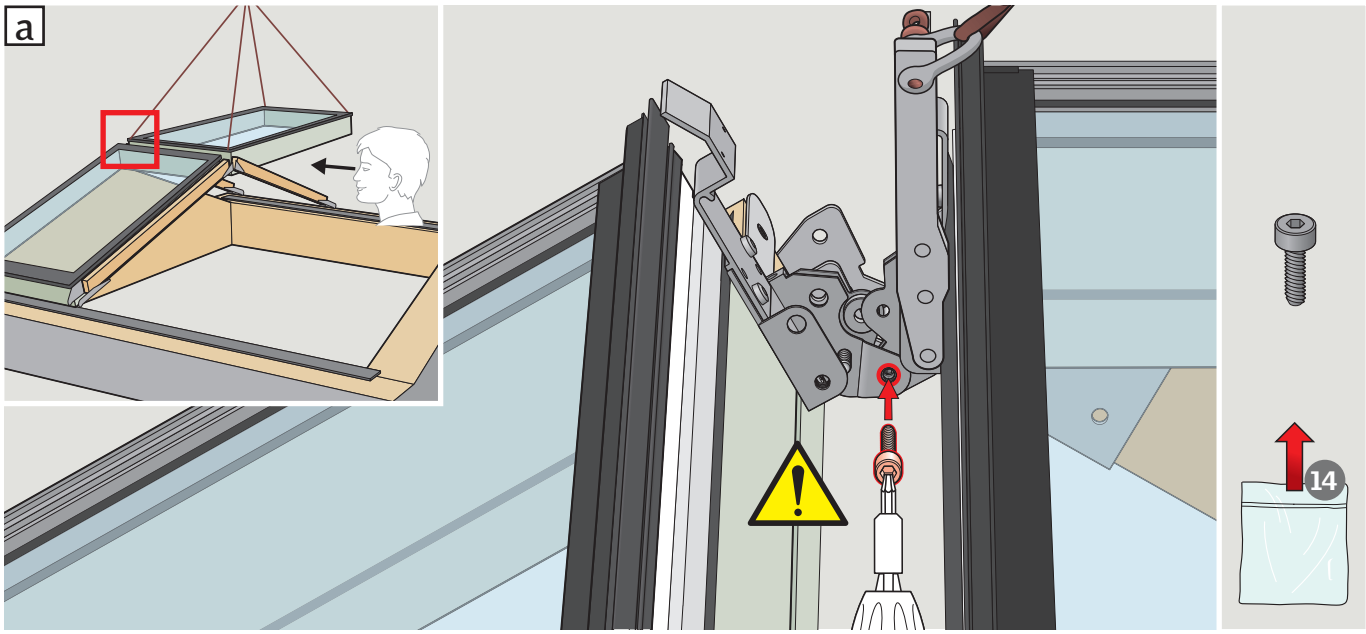
a
14

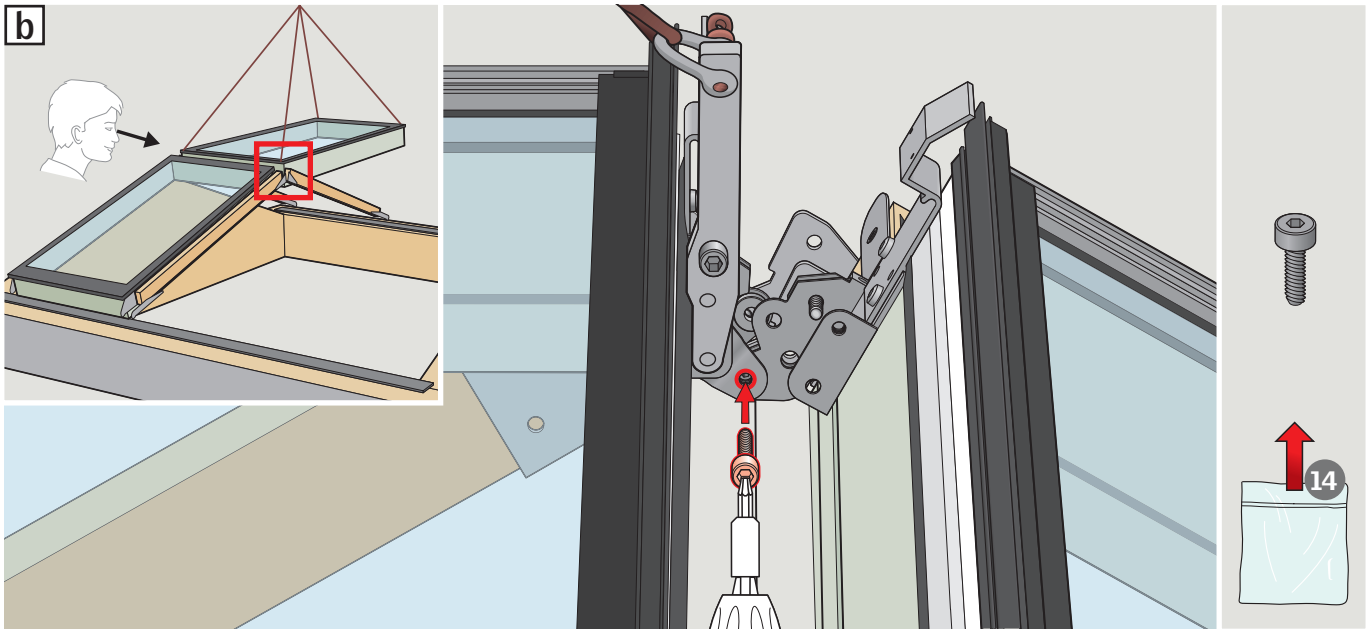
b
14

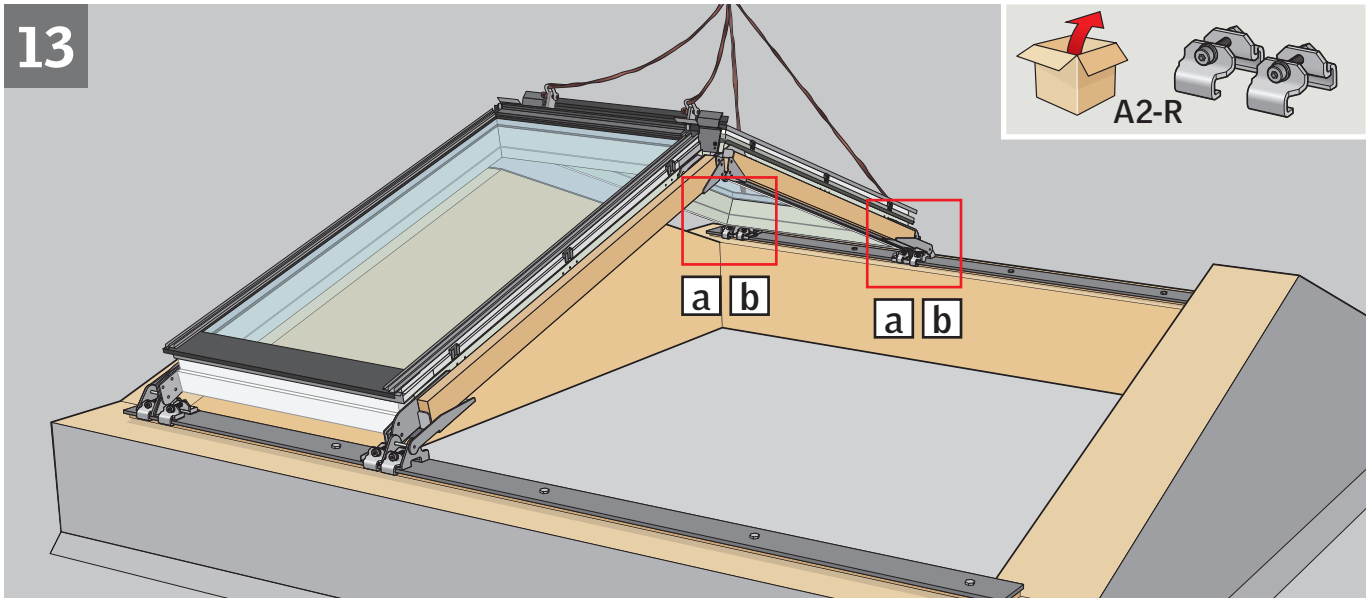
13
A2-R
a
b
a
b

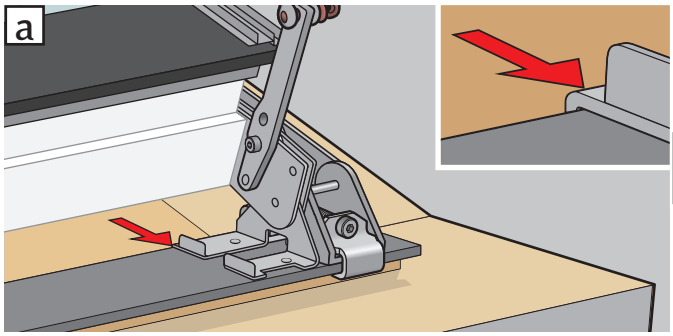
a

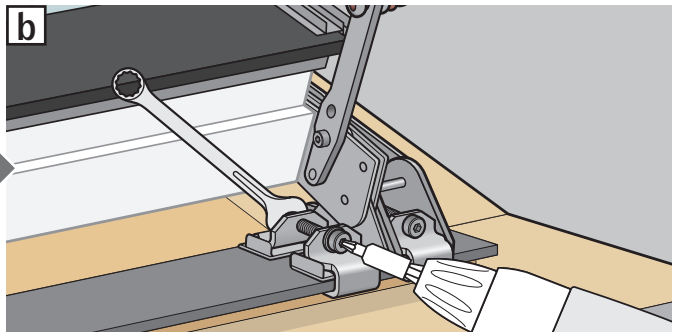
b

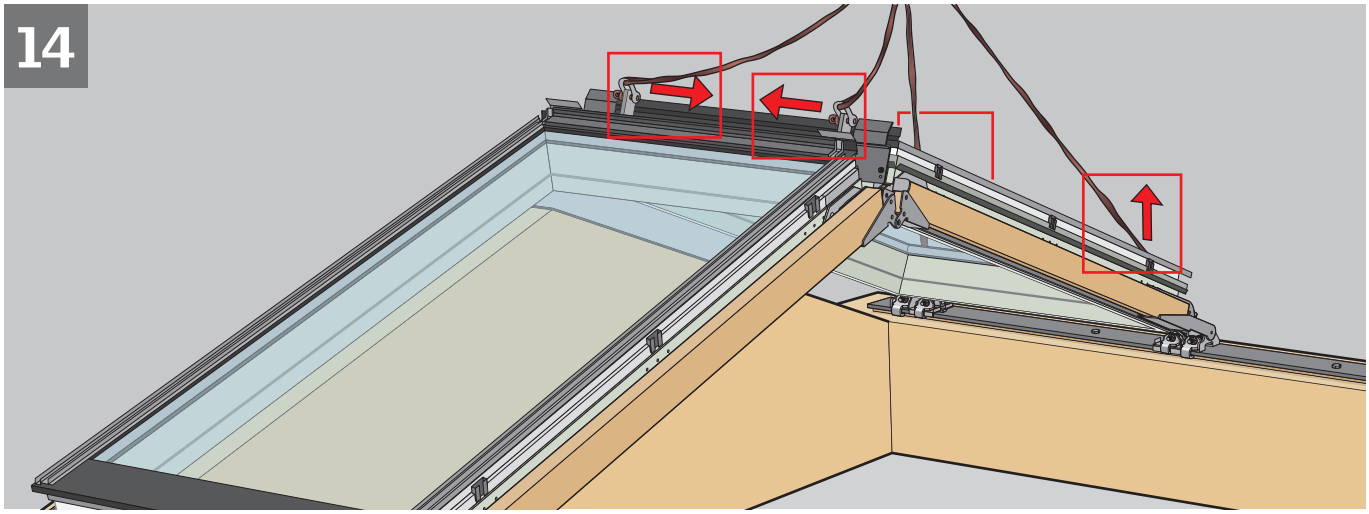
14

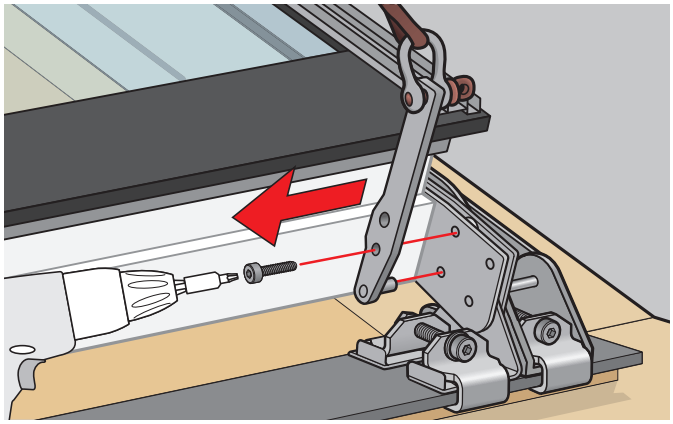

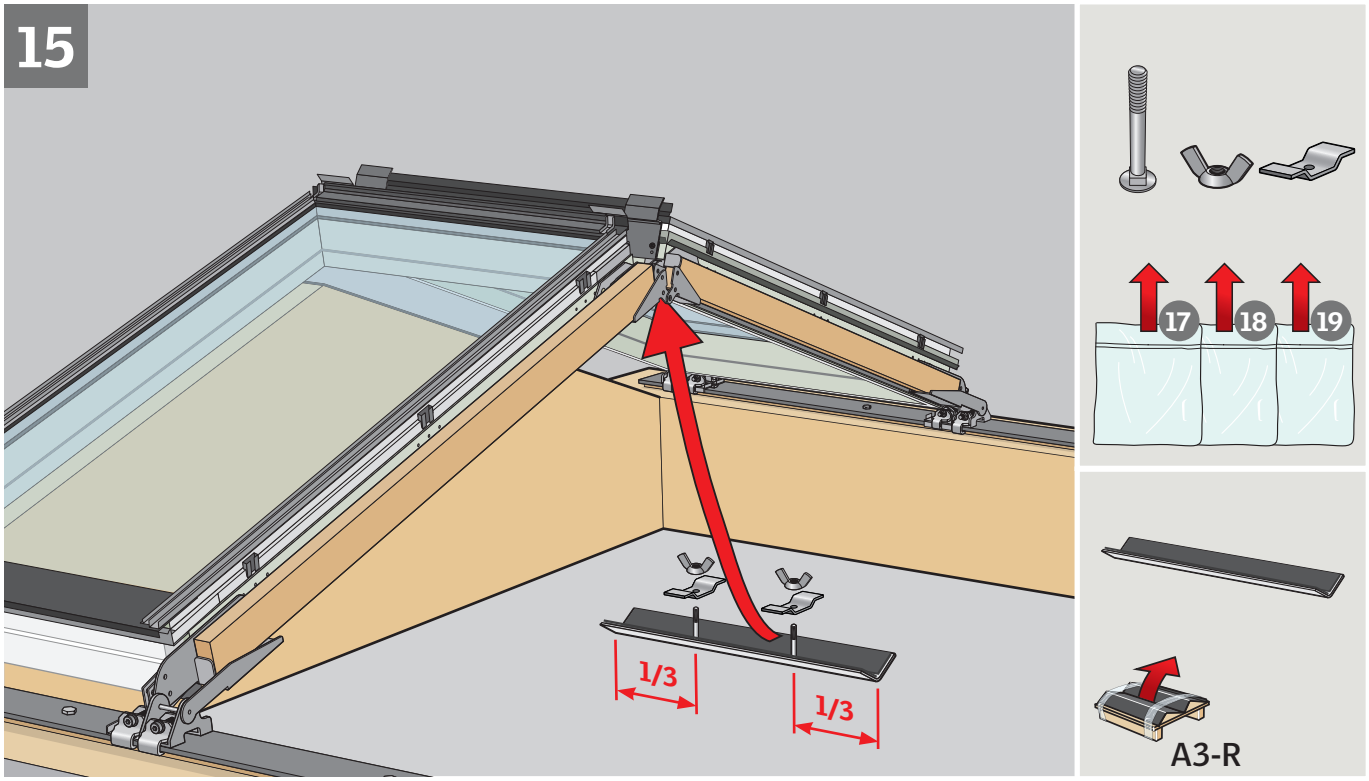
15
1/3
1/3
17
18
19
A3-R

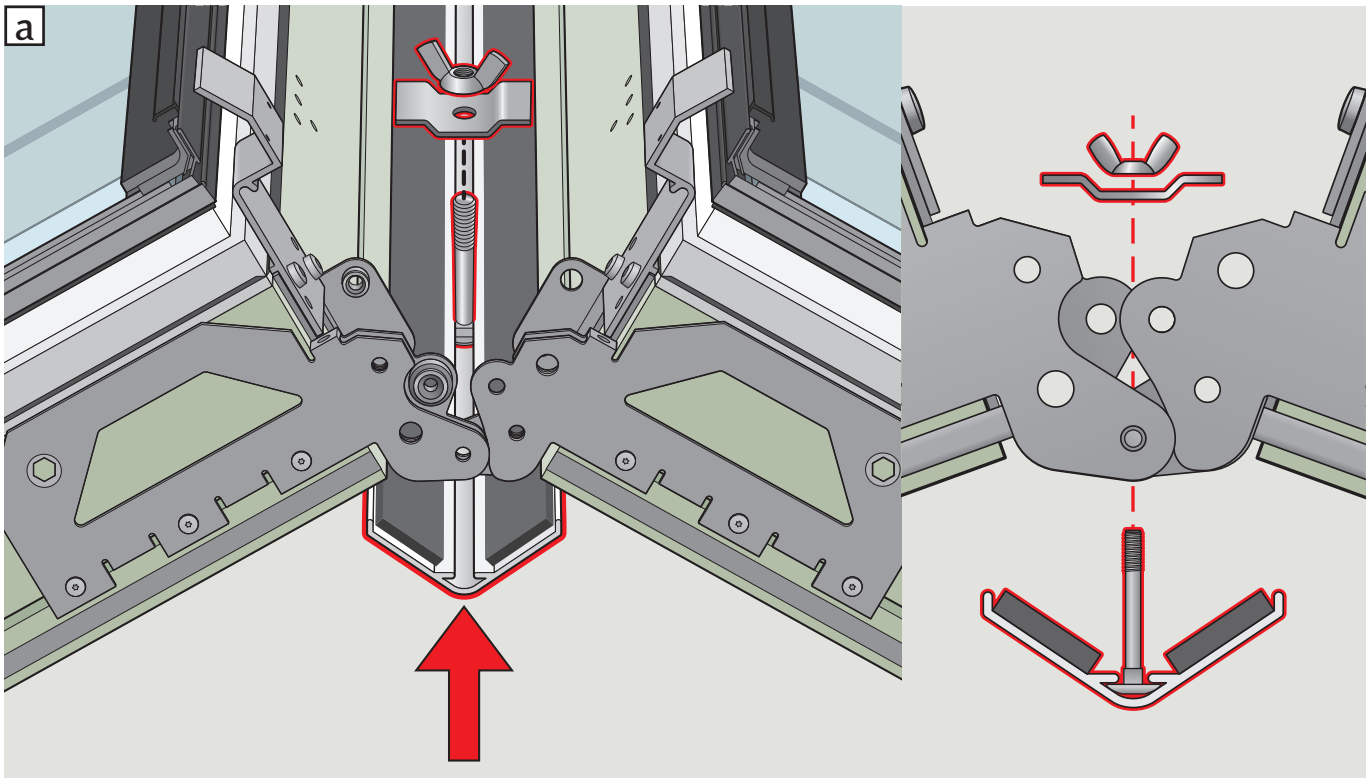
a

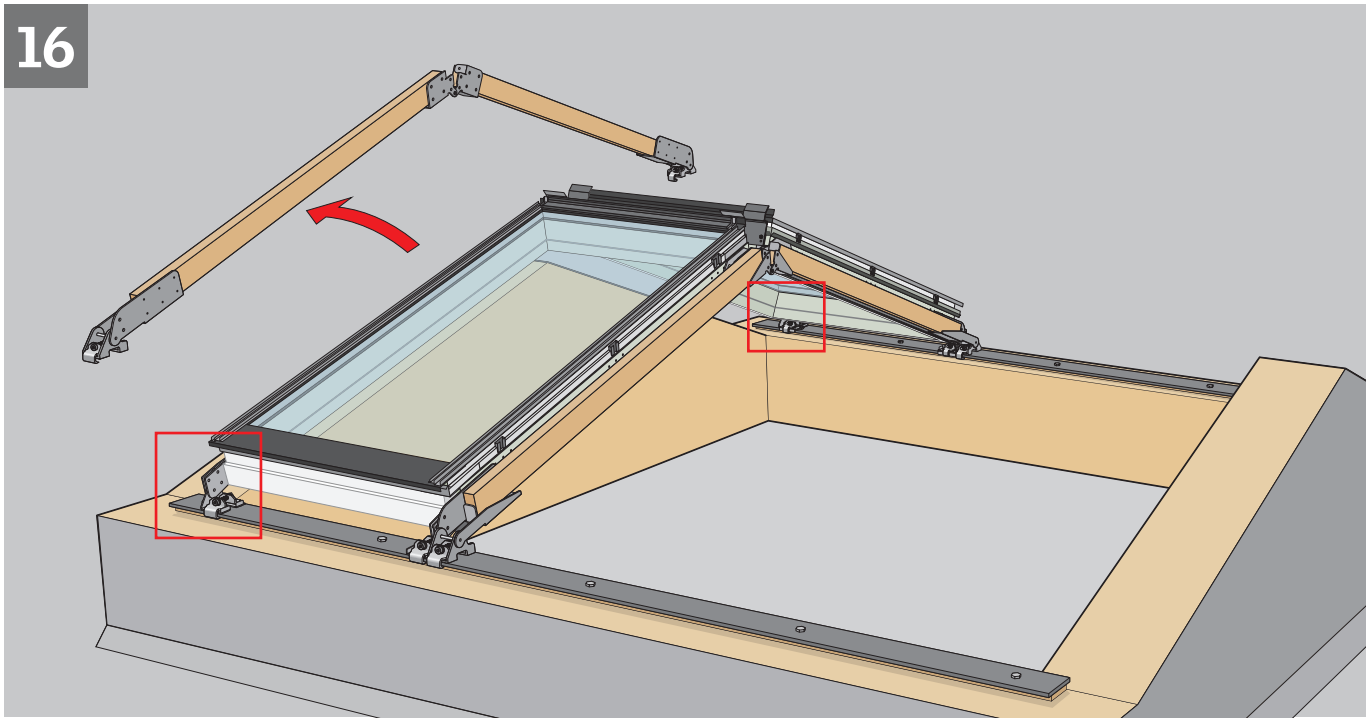
16

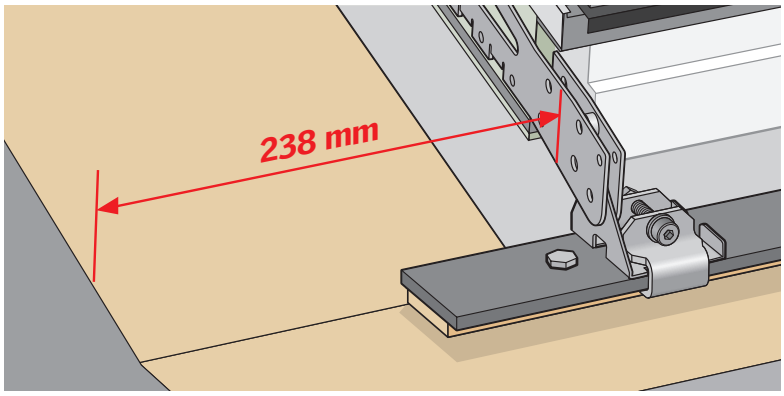
238 mm

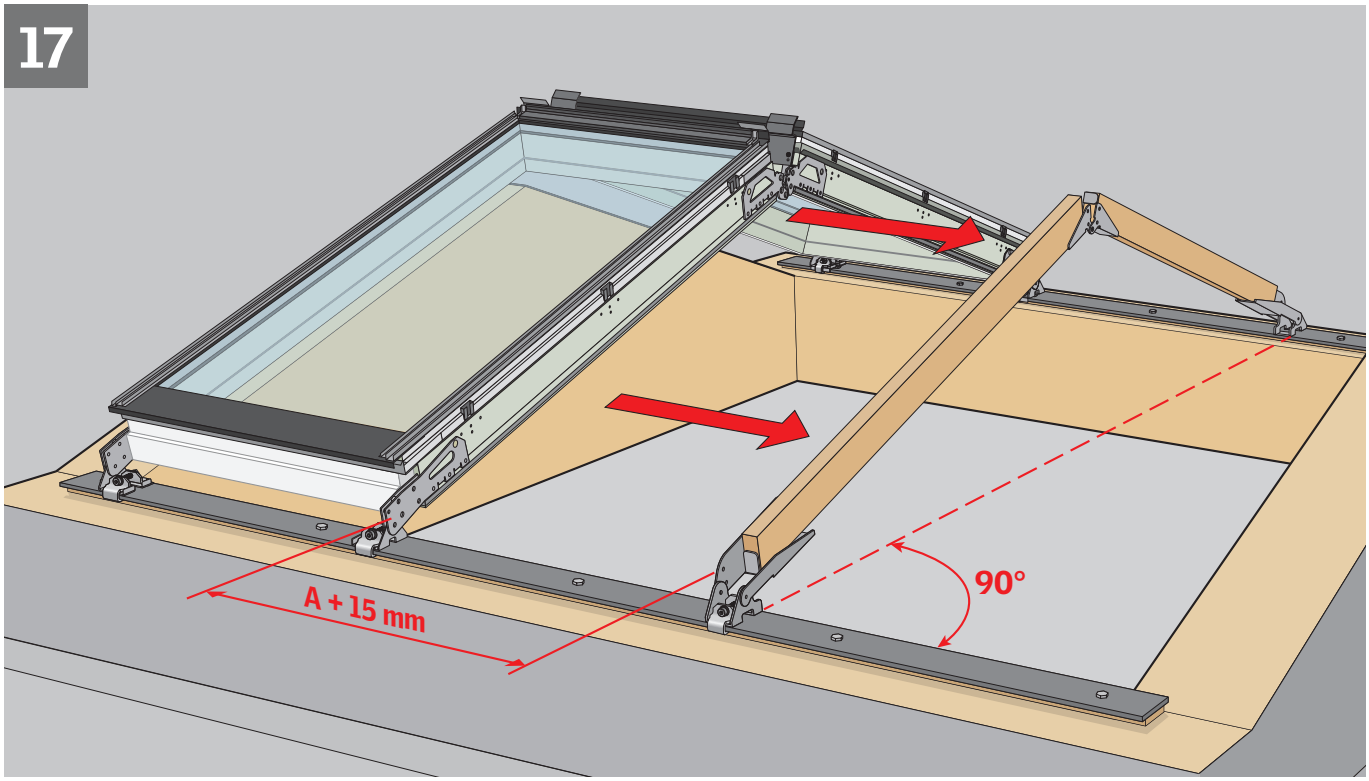
17
A + 15 mm
90°

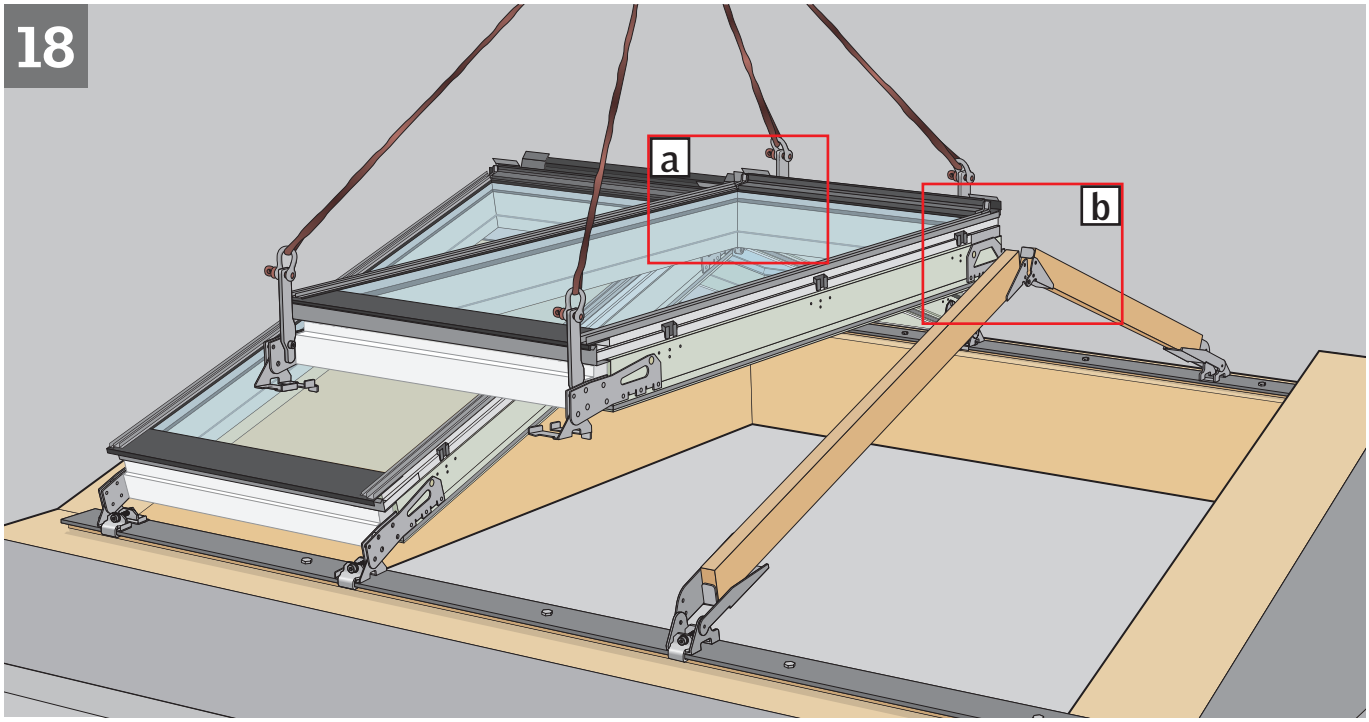
18
a
b

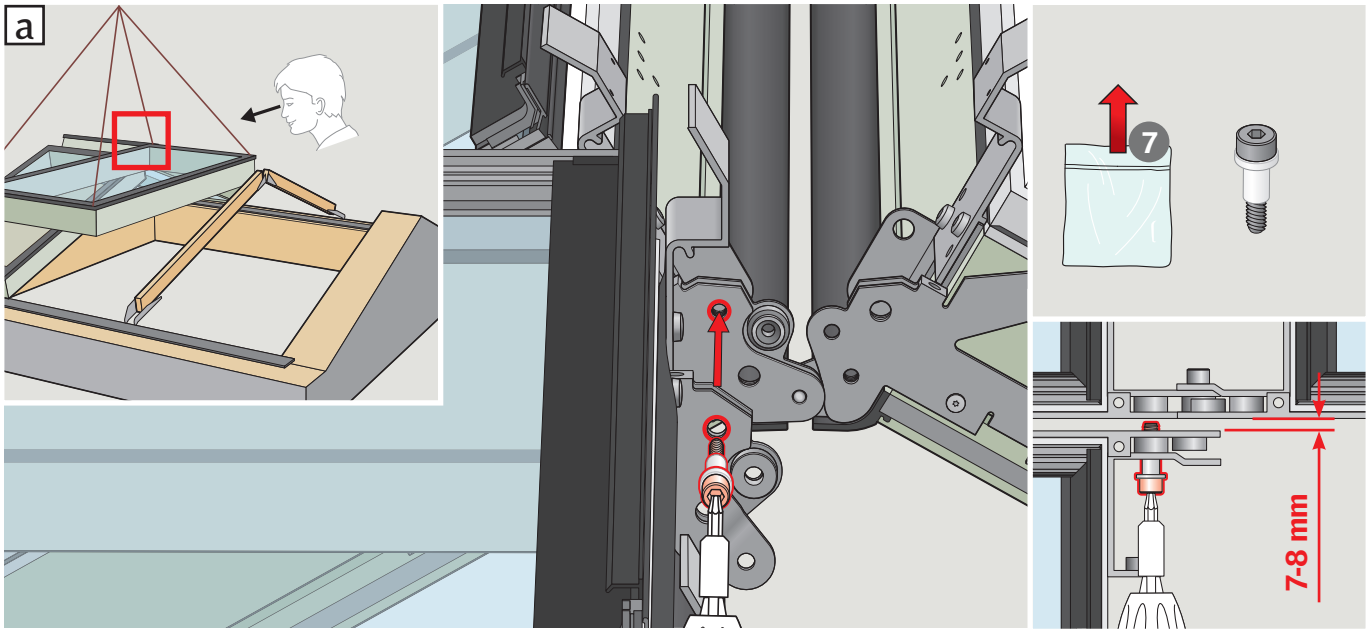
a
7
7-8 mm

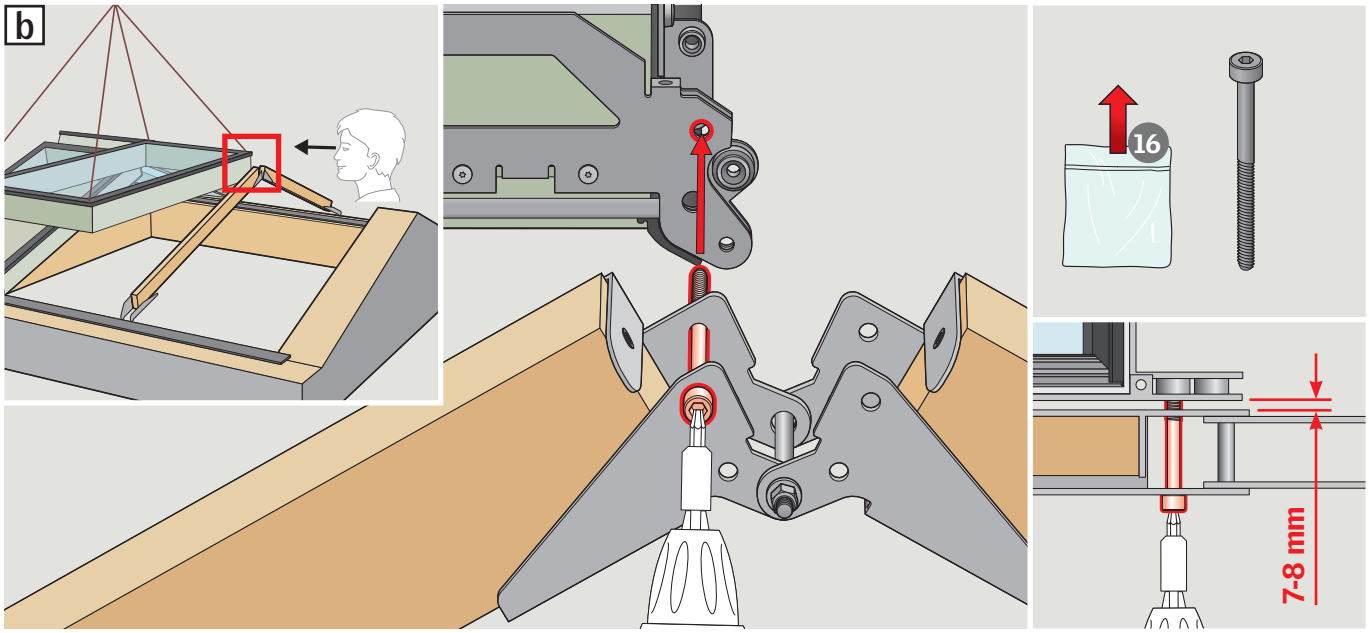
b
16
7-8 mm

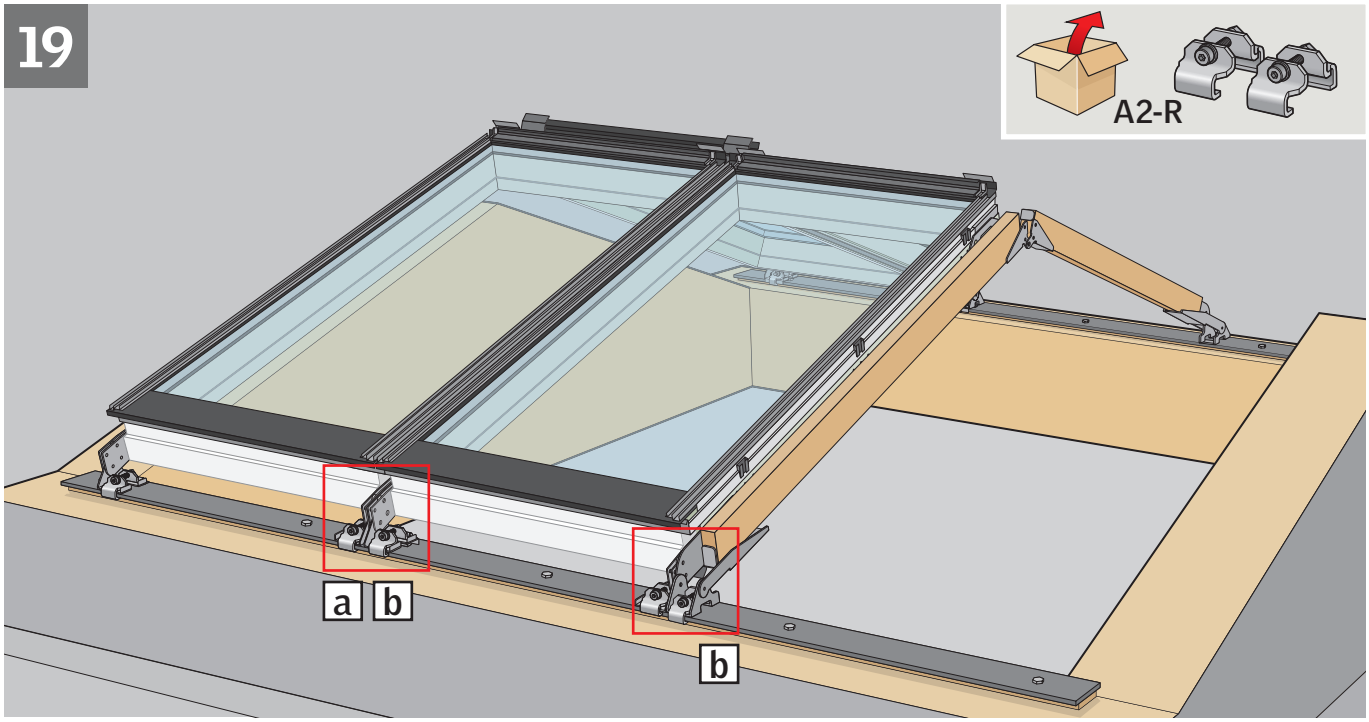
19
A2-R
a
b
b

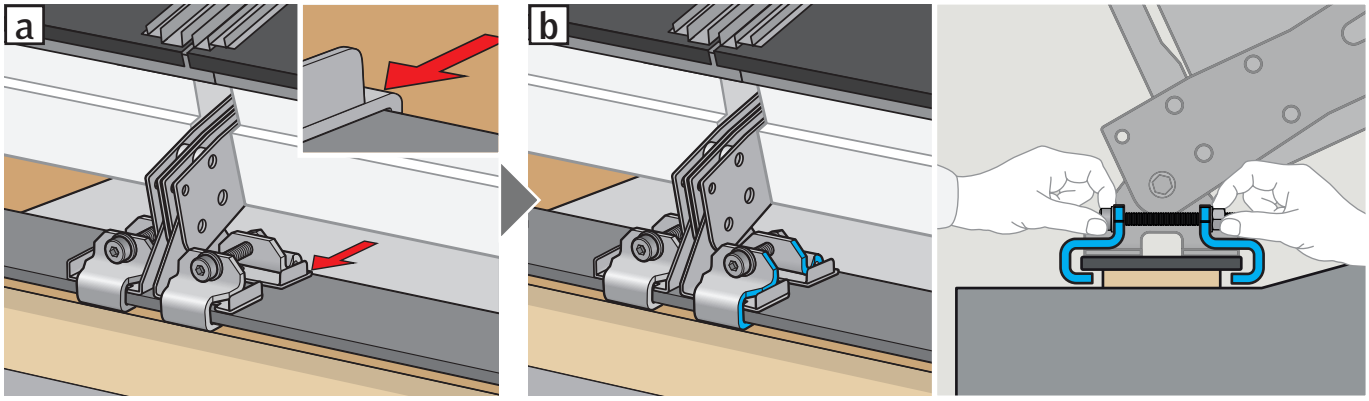
a
b

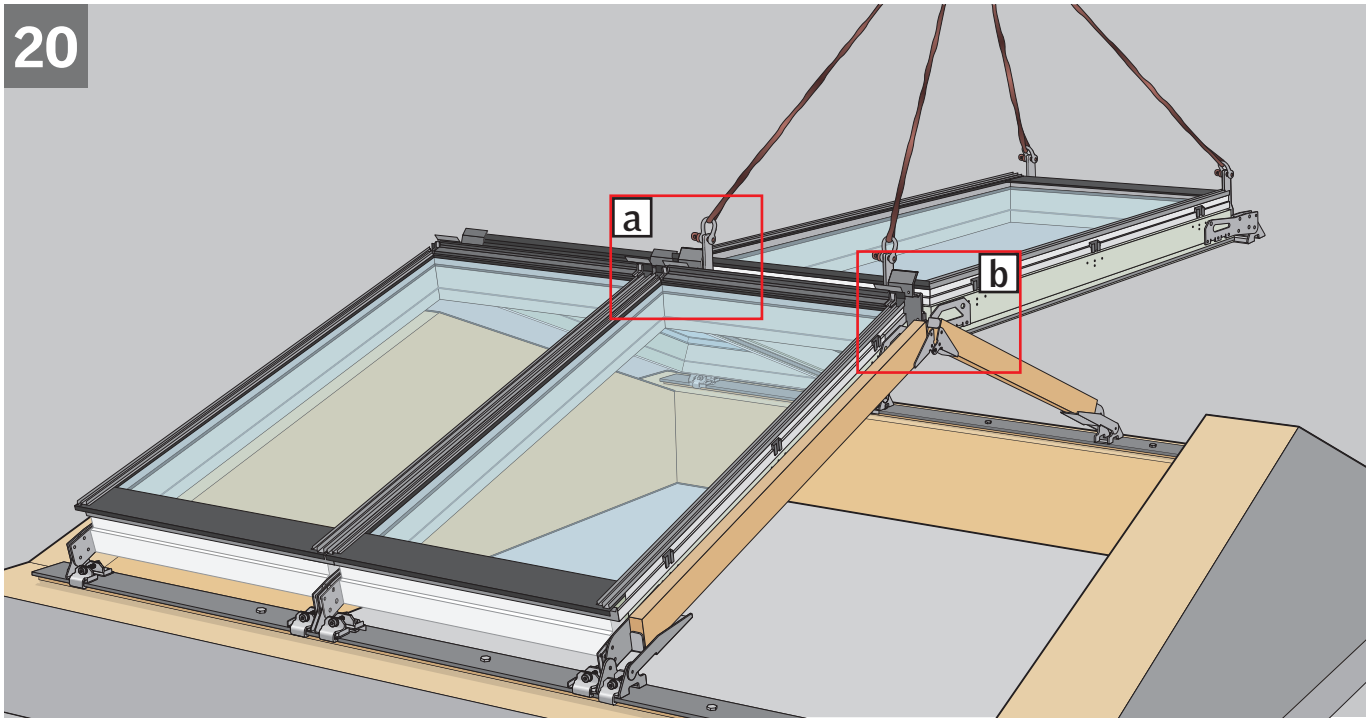
20
a
b

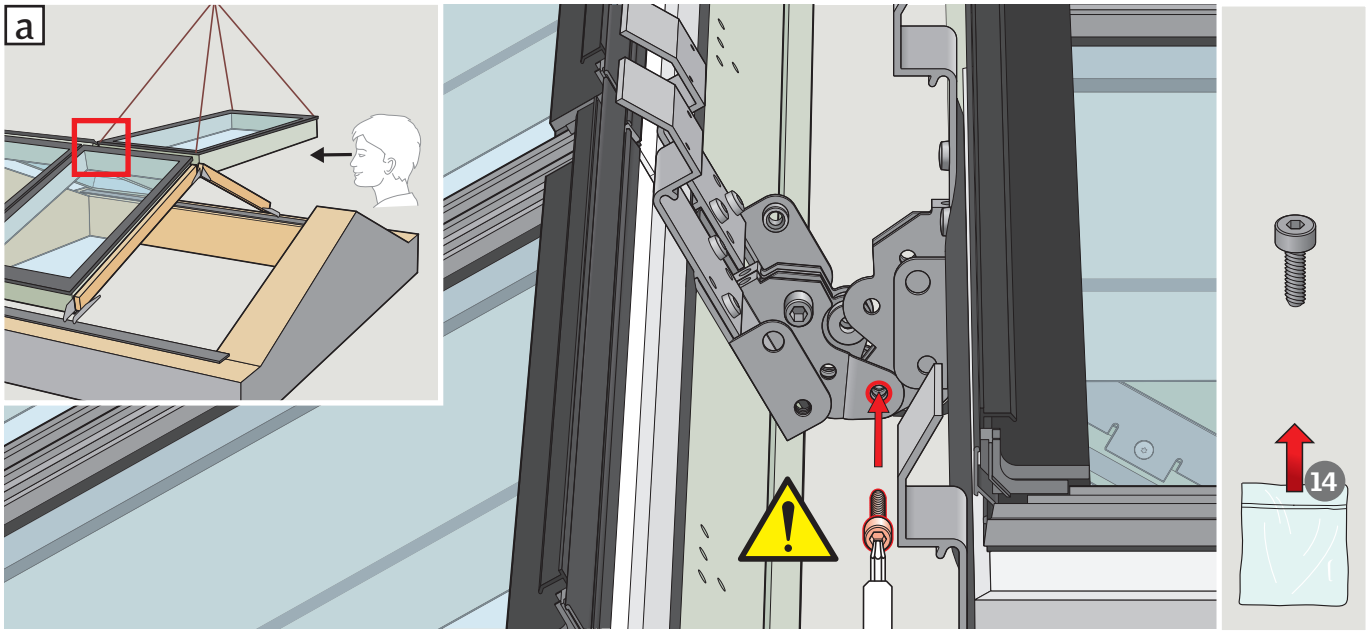
a
14

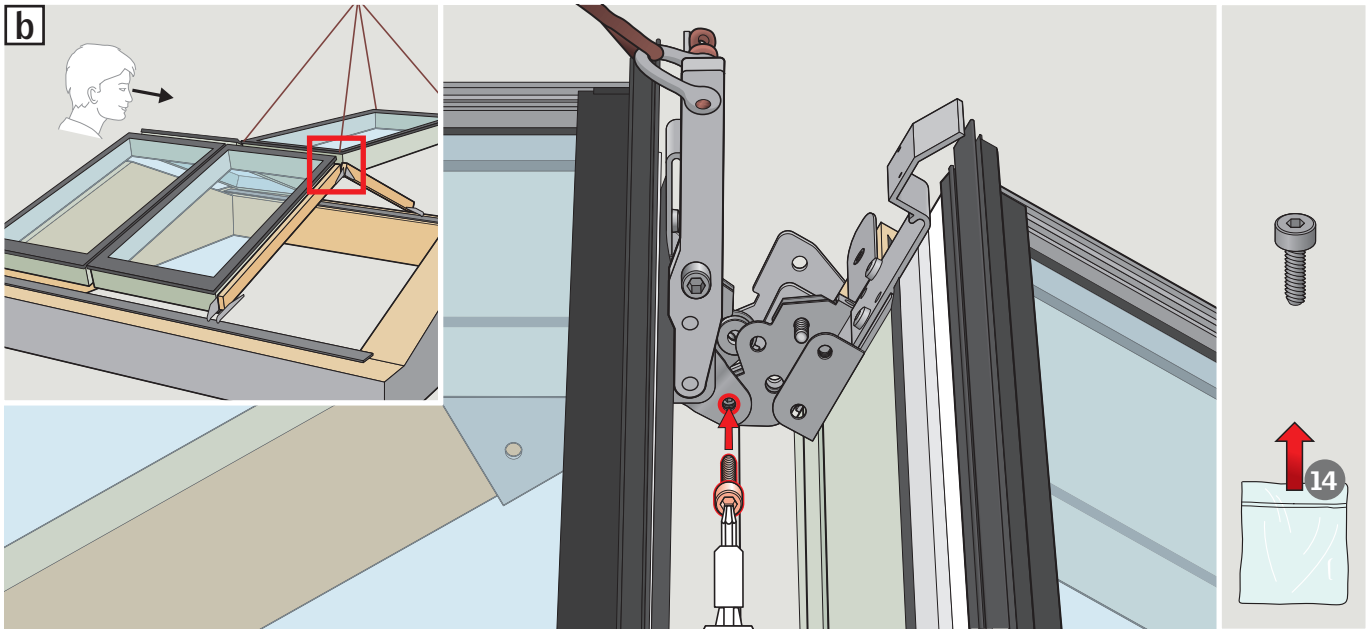
b
14

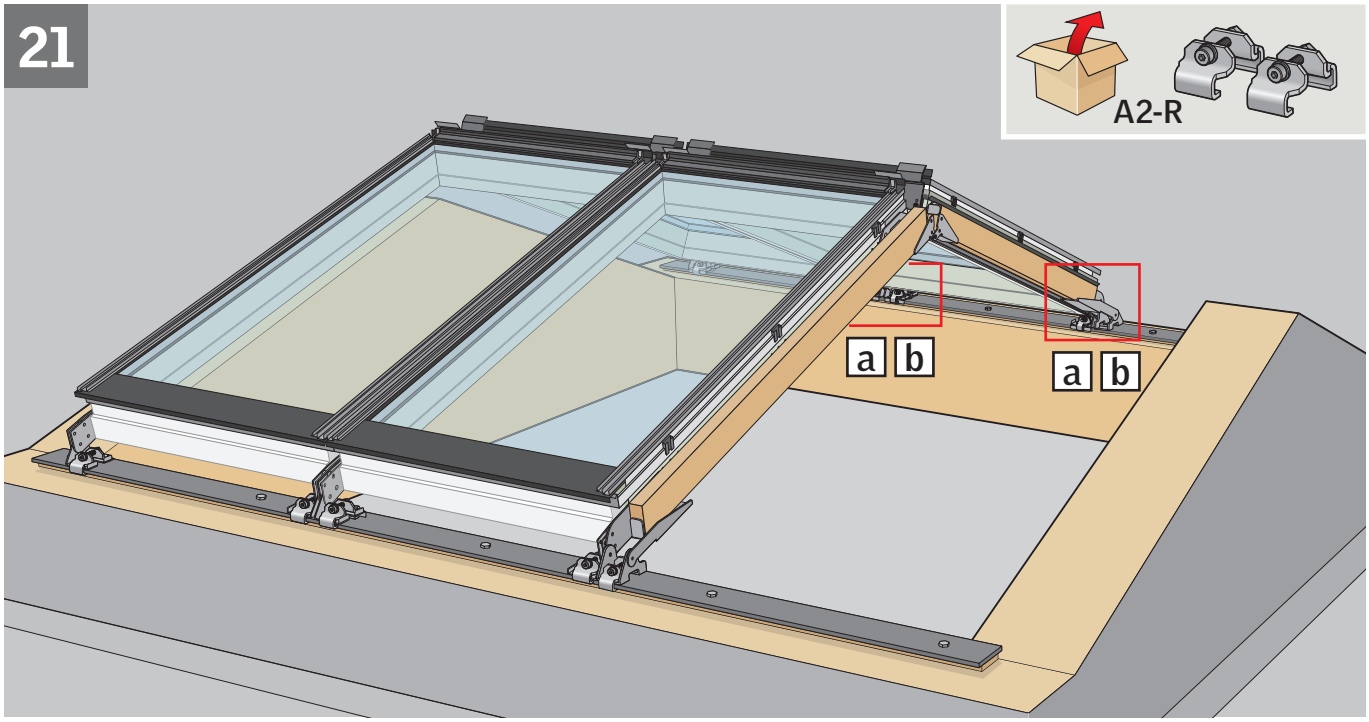
21
A2-R
a
b
a
b

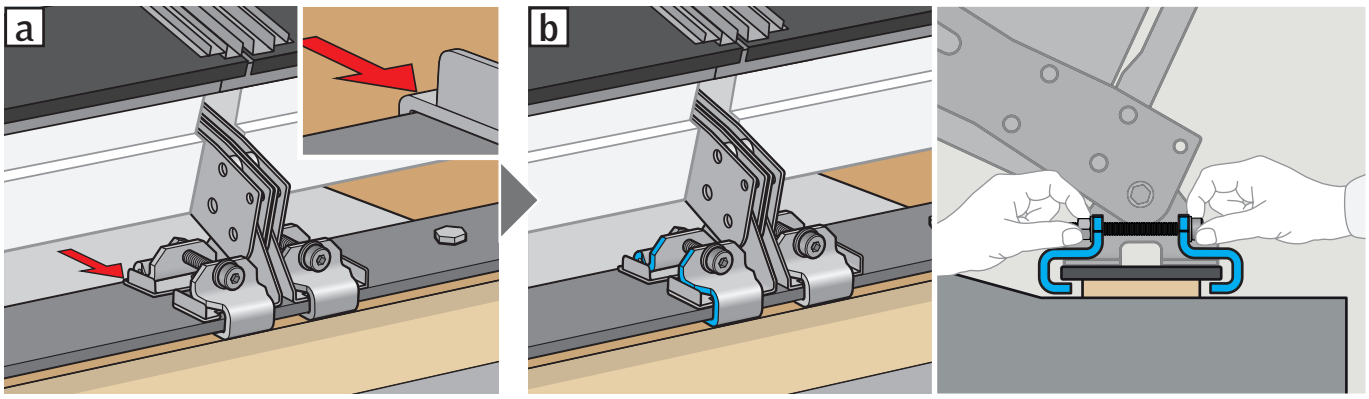
a
b

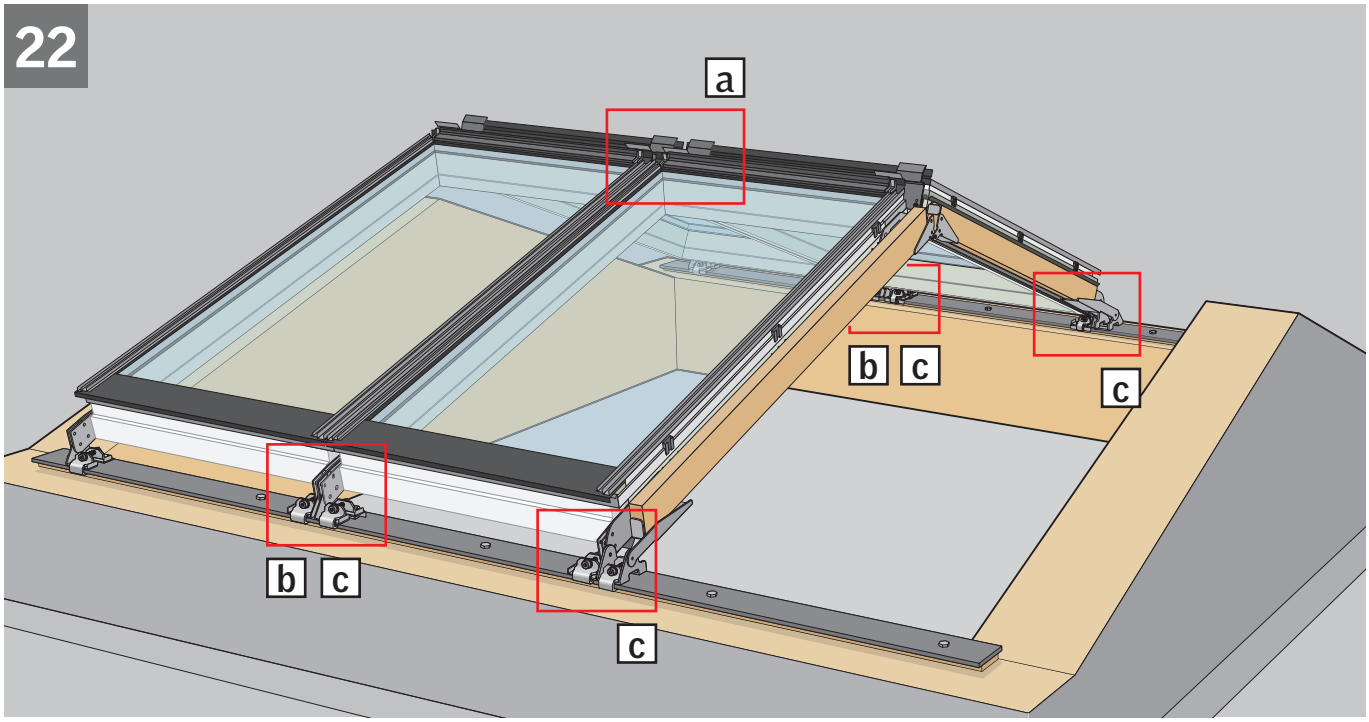
22
a
b
c
b
c
c

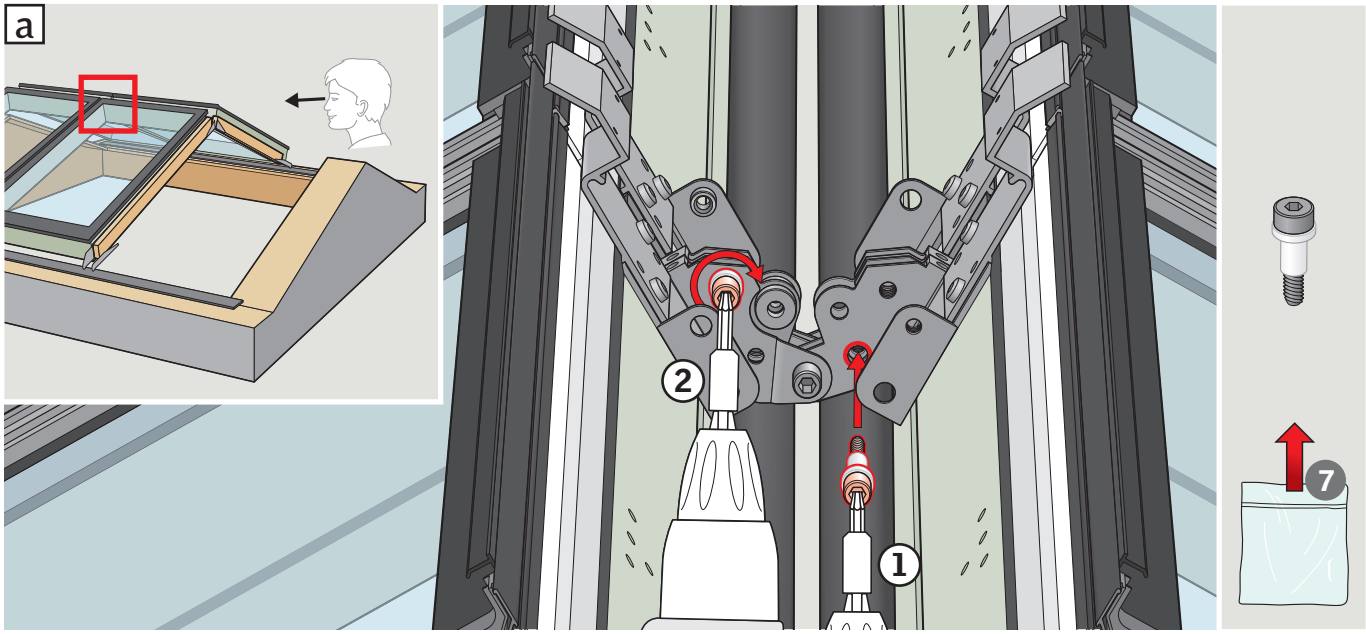
a
2
1
7

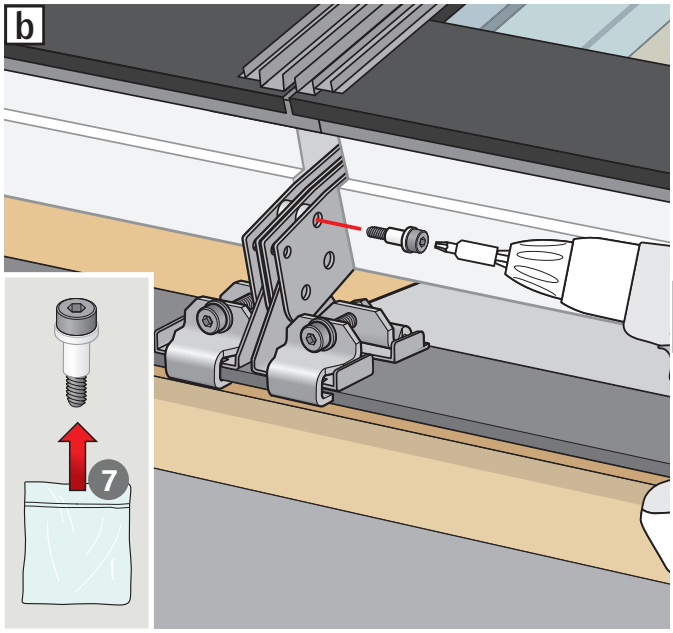
b
7

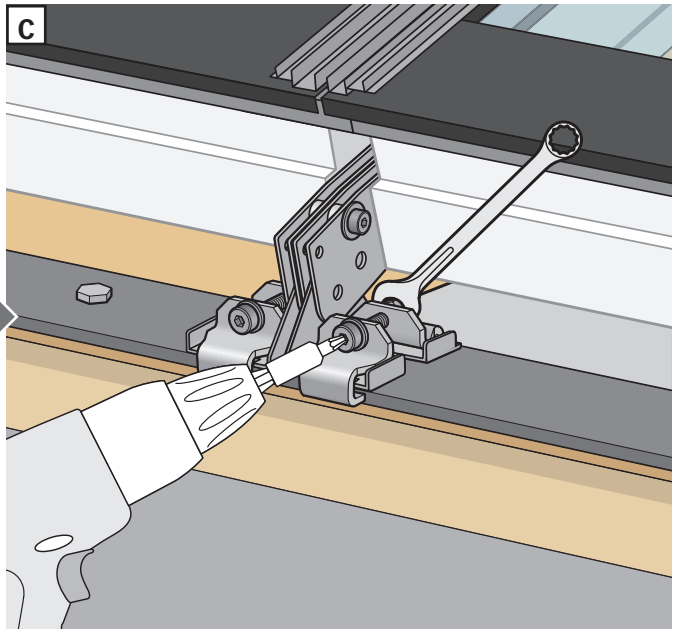
c

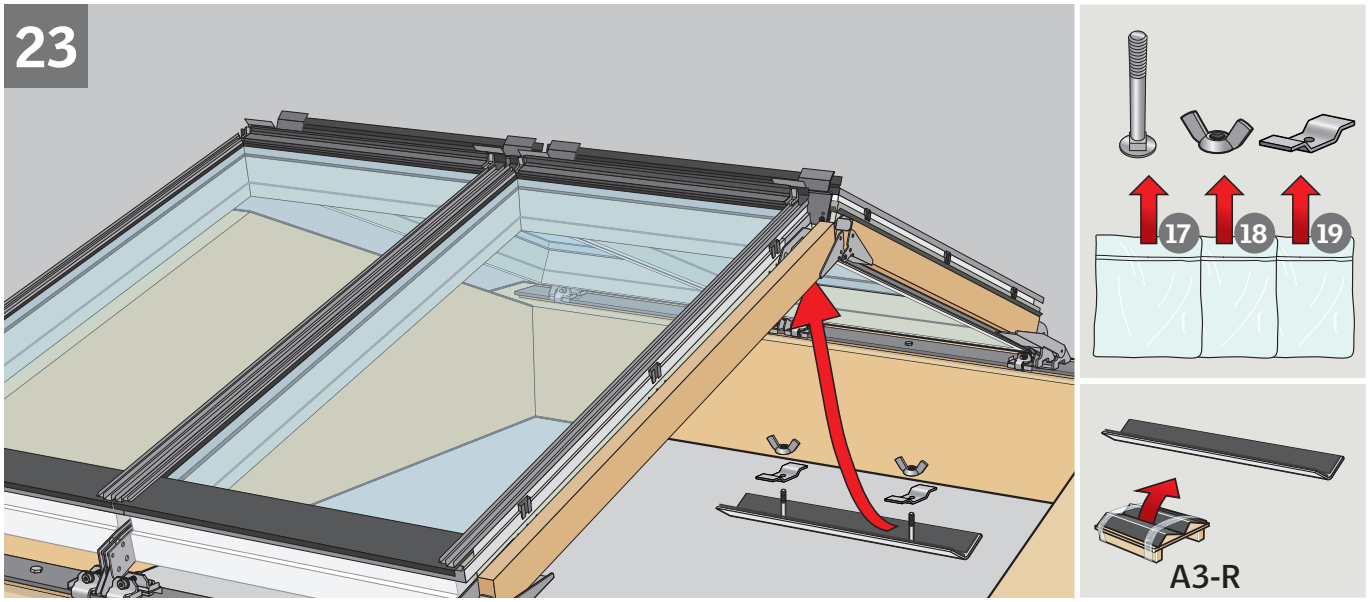
23
17
18
19
A3-R

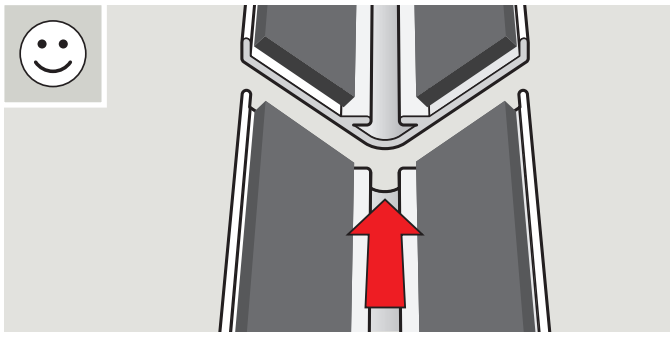

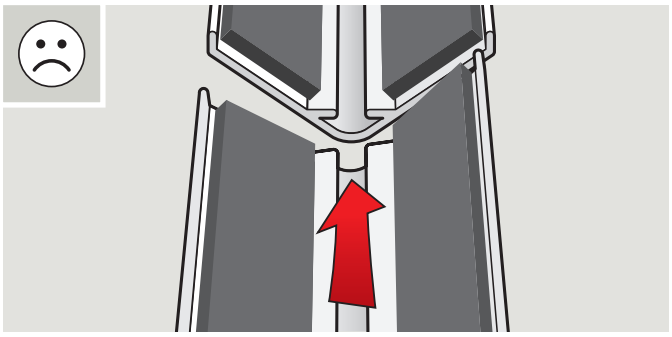

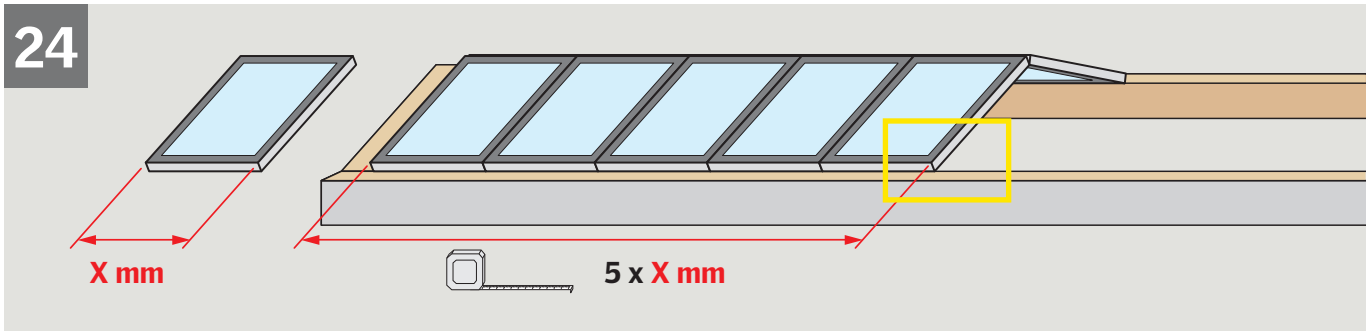
24
X mm
5 x X mm

5 x X mm
25

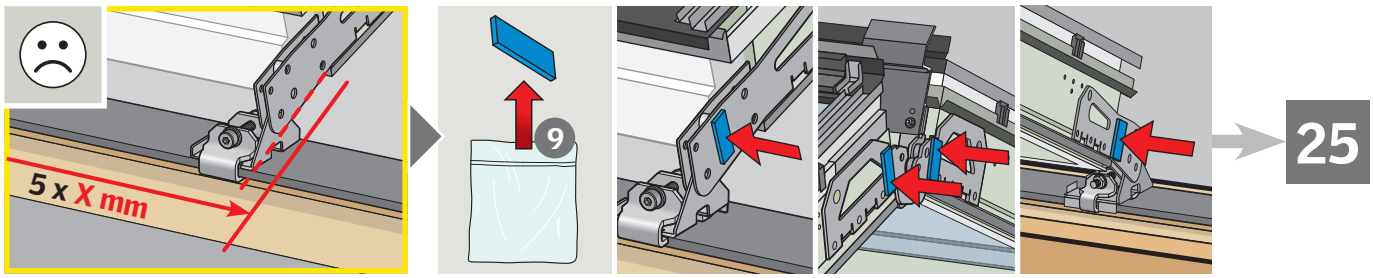
5 x X mm
9
25

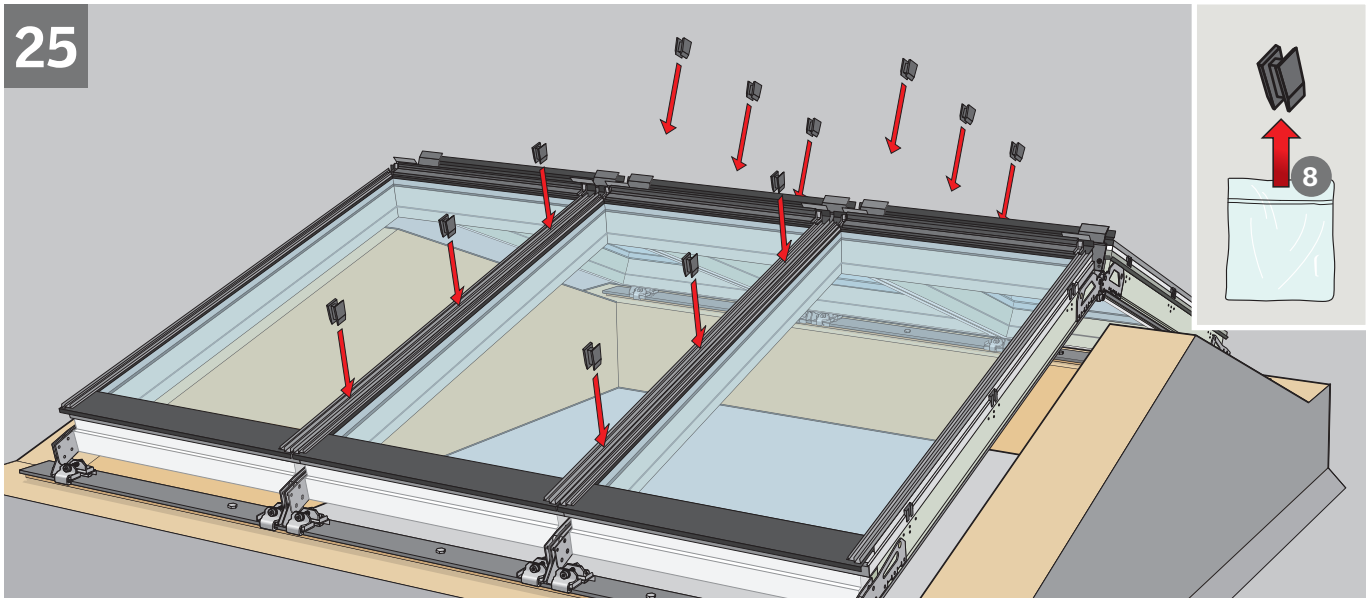
25
8

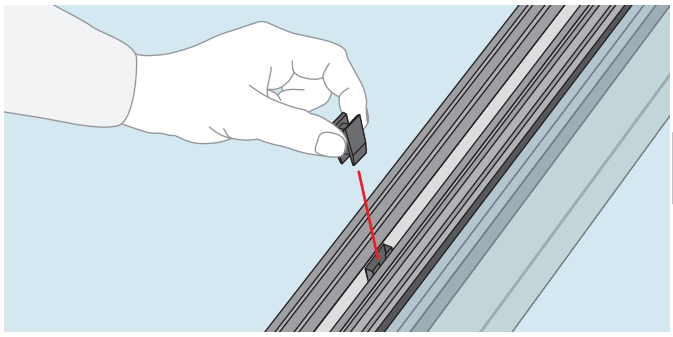

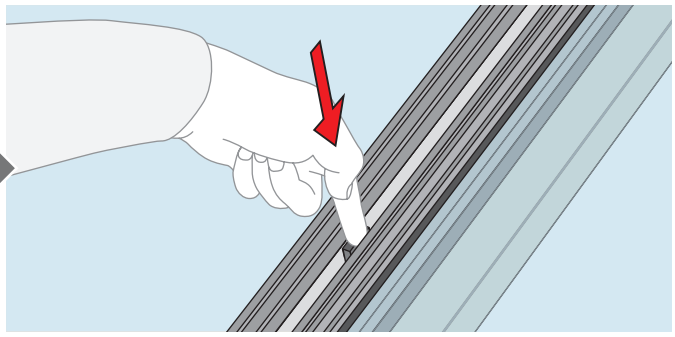

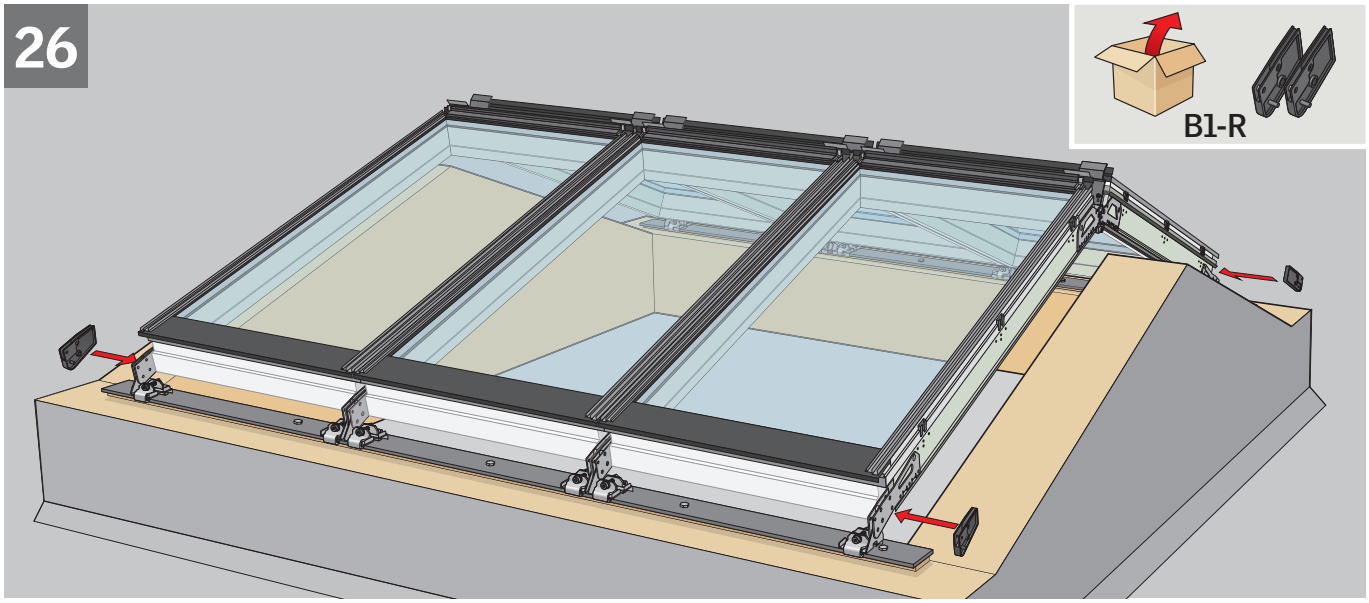
26
B1-R

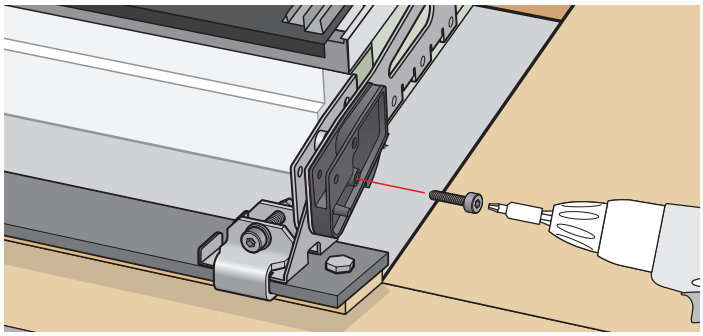

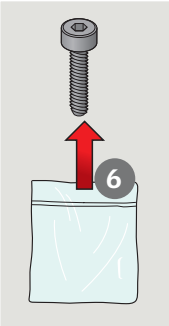
6

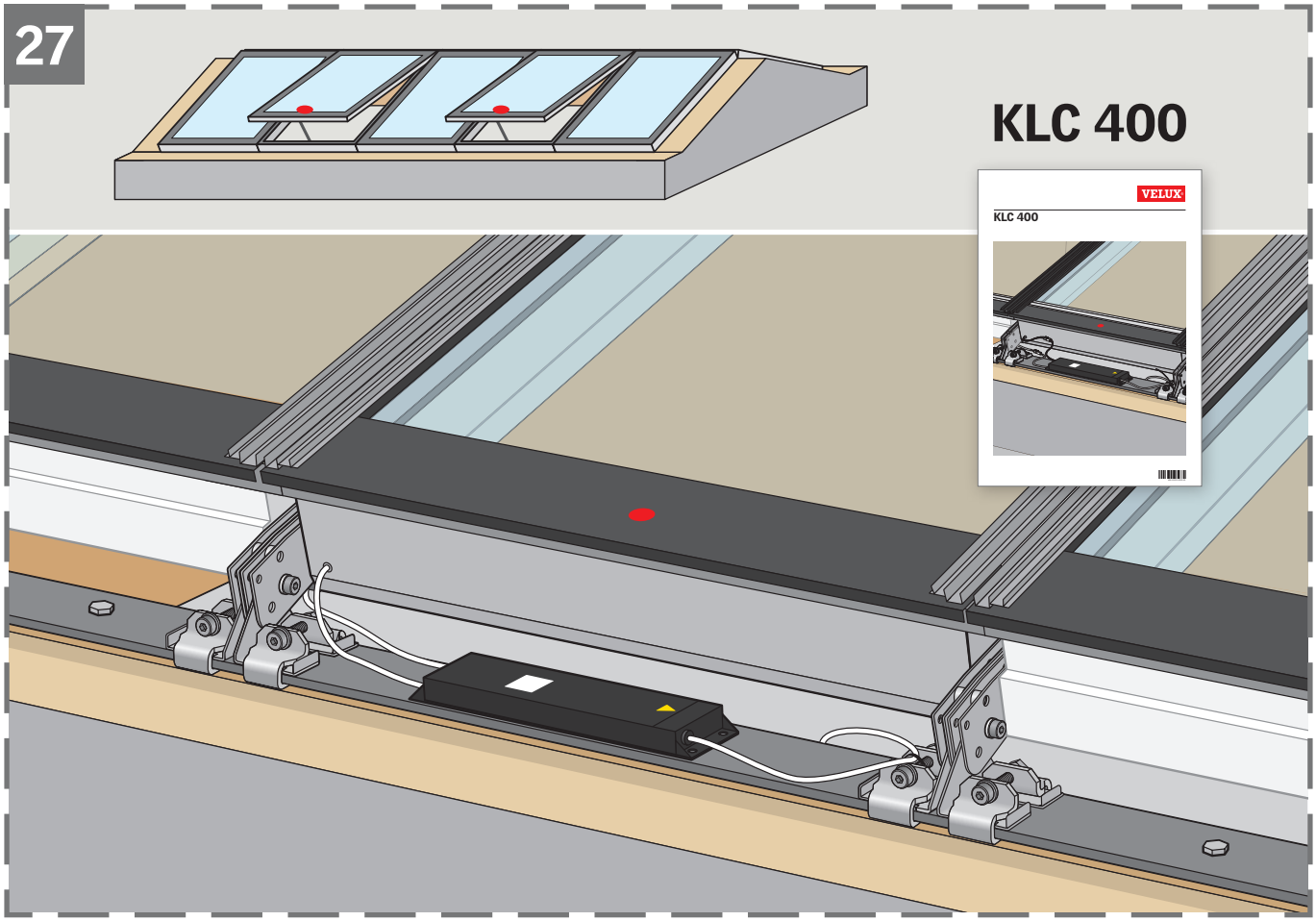
27
KLC 400
VELUX
KLC 400

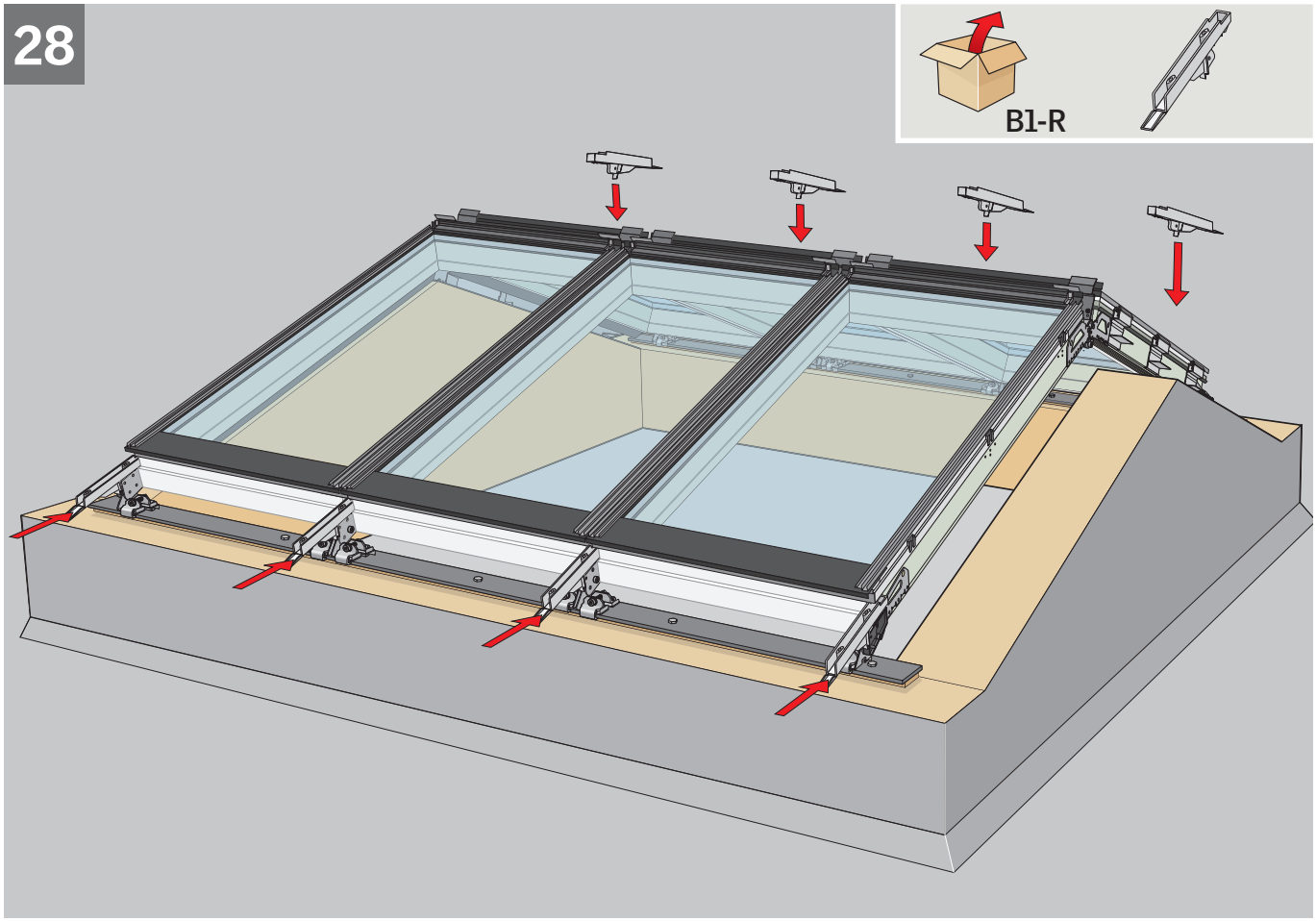
28
B1-R

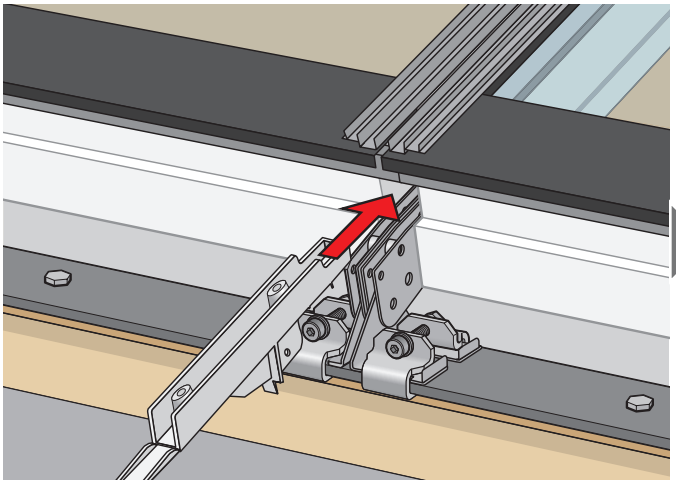

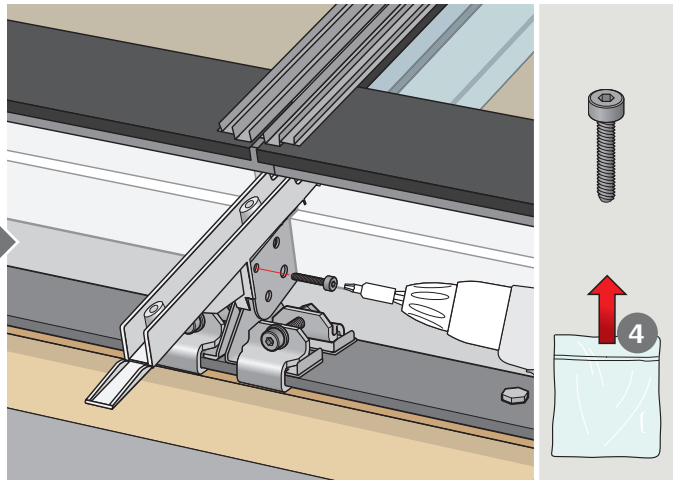
4

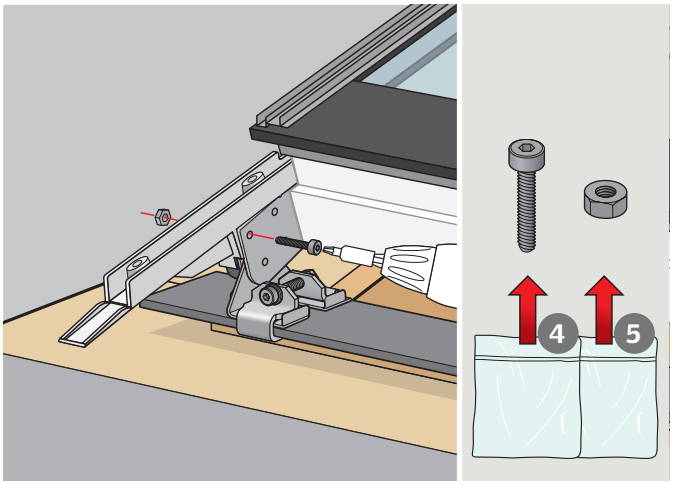
4
5

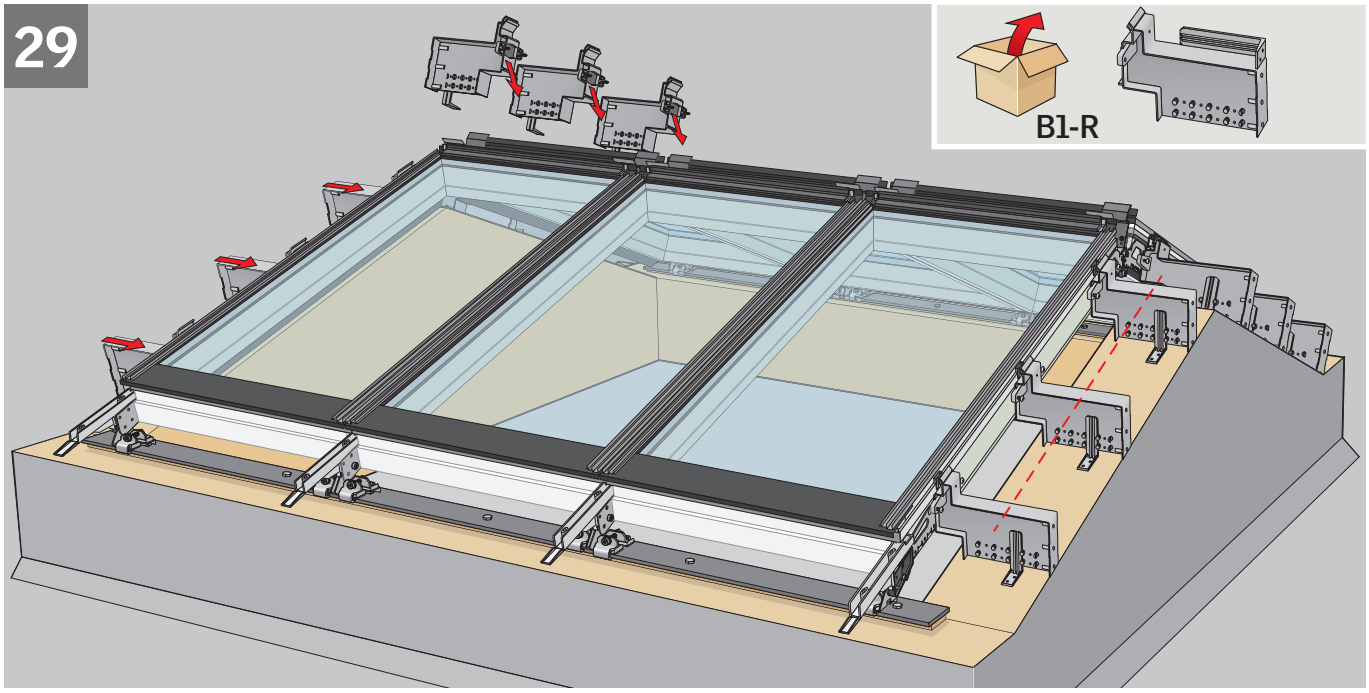
29
B1-R

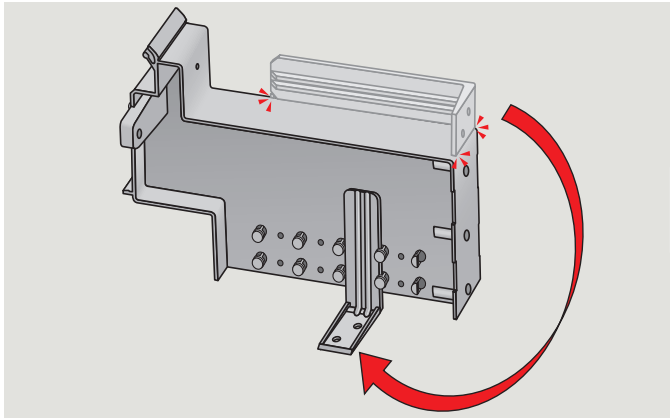

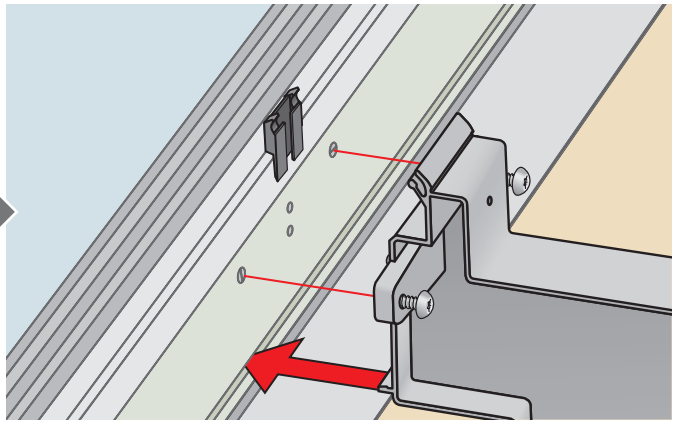

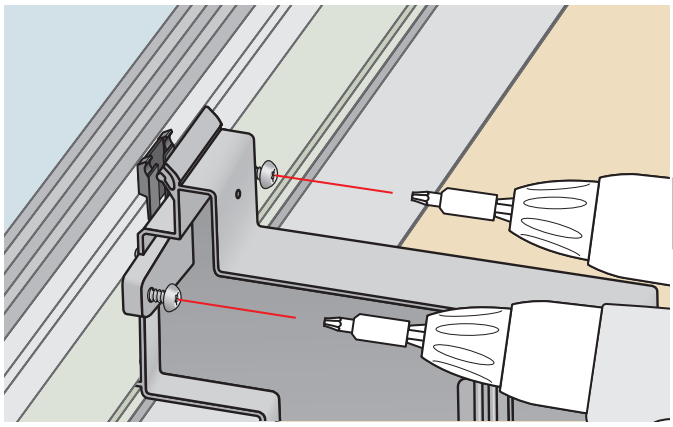

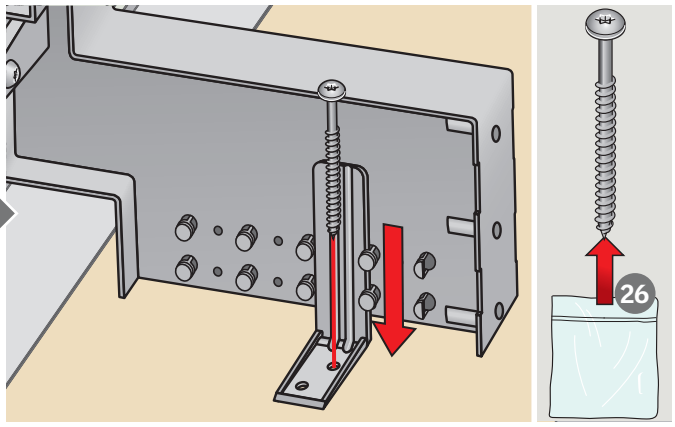
26

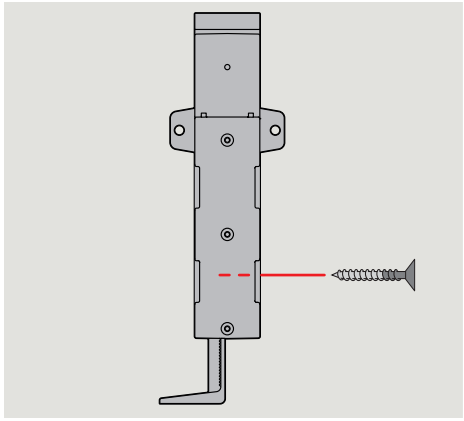

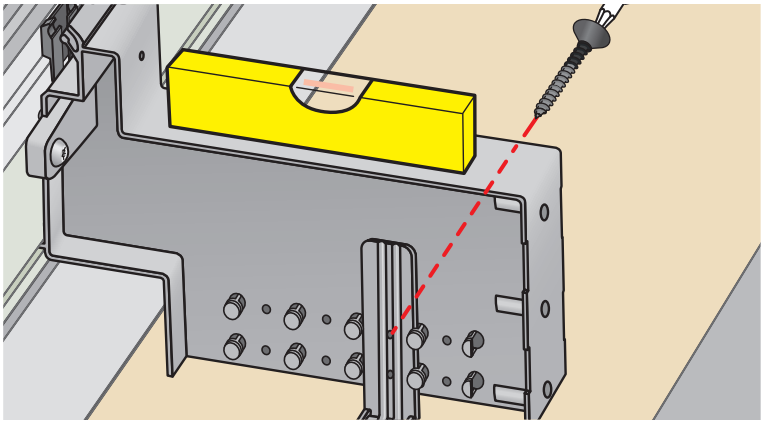

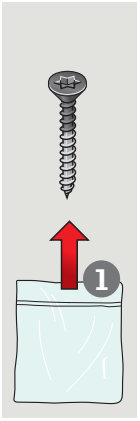
1

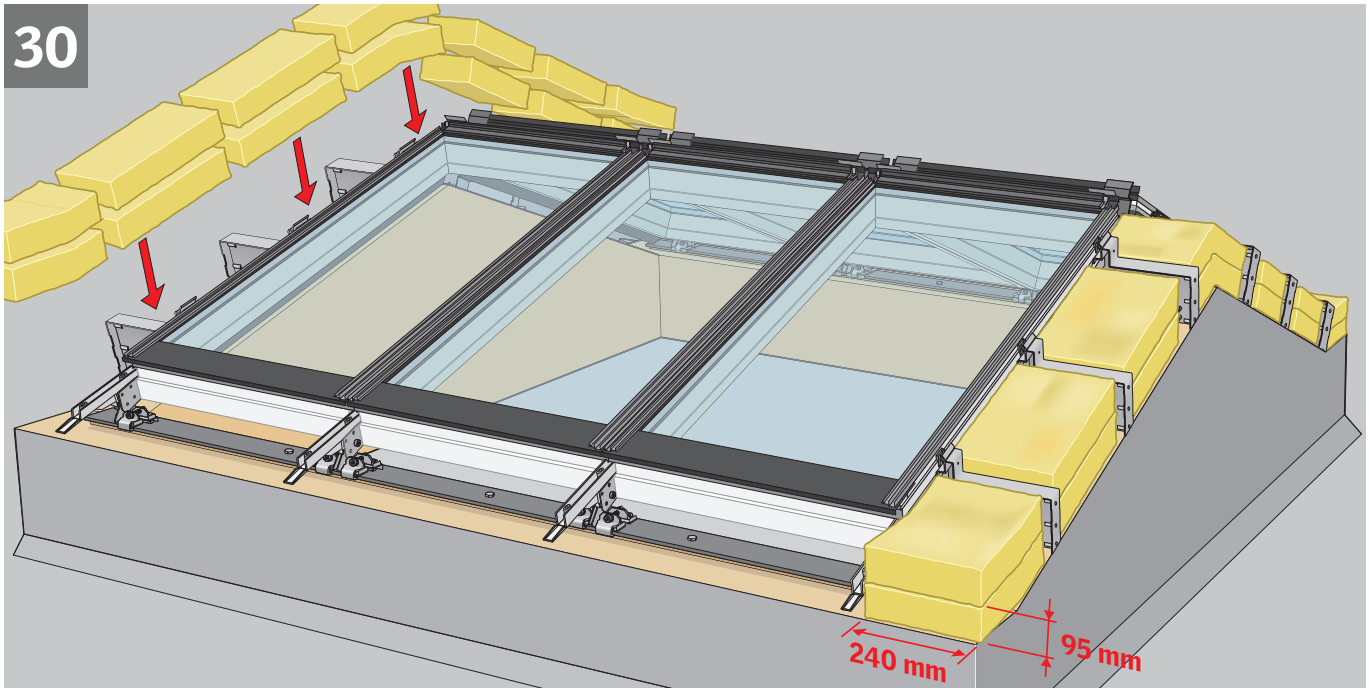
30
240 mm
95 mm

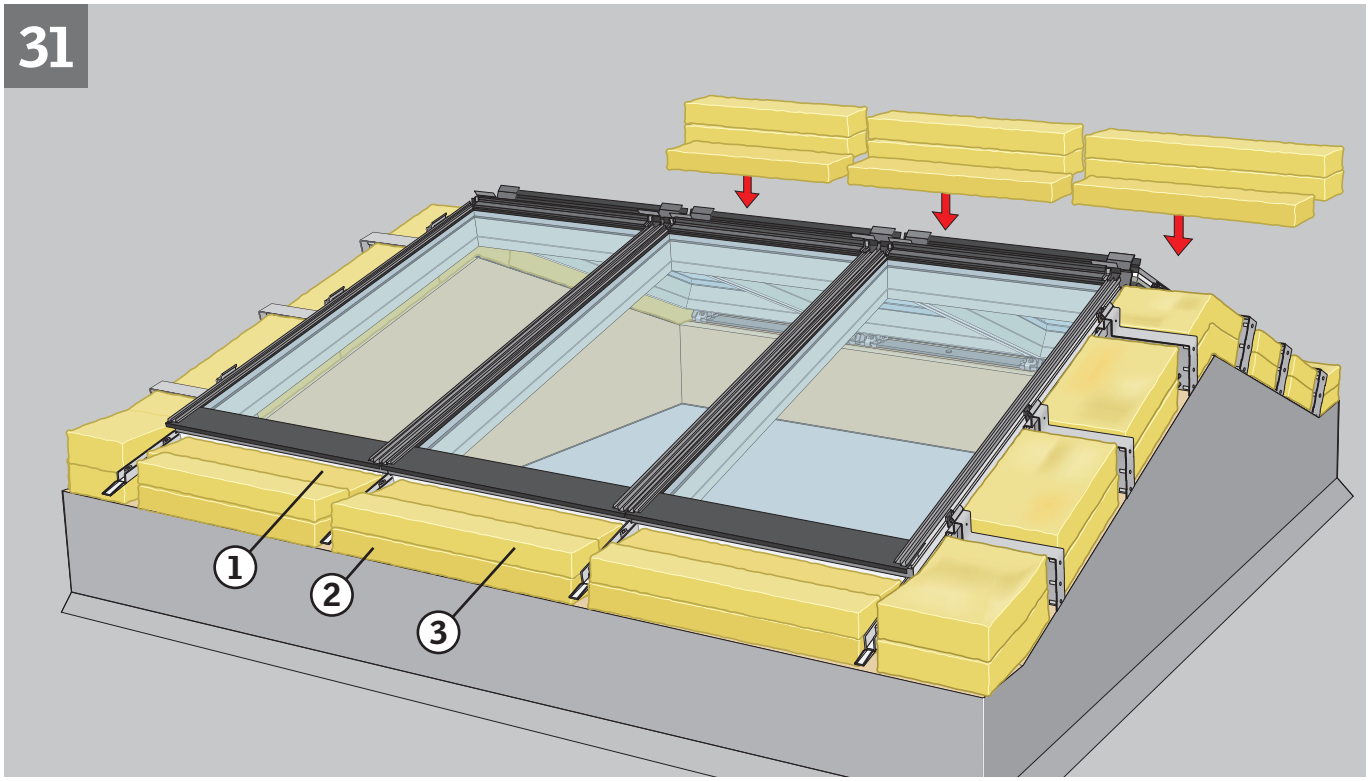
31
1
2
3

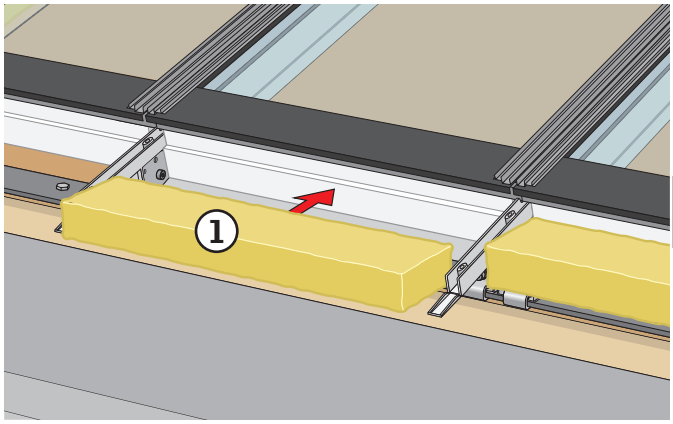
1

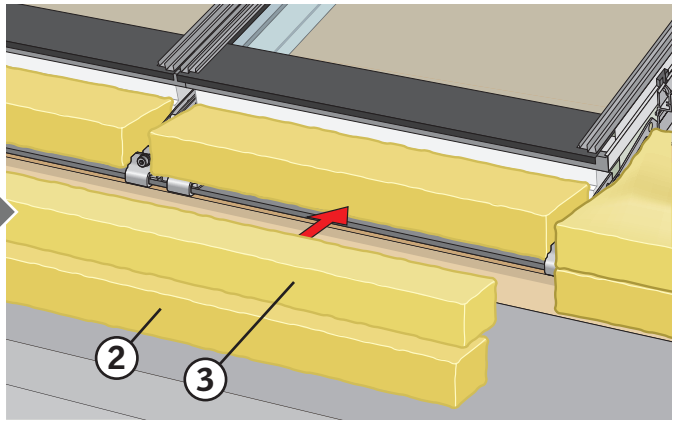
2
3

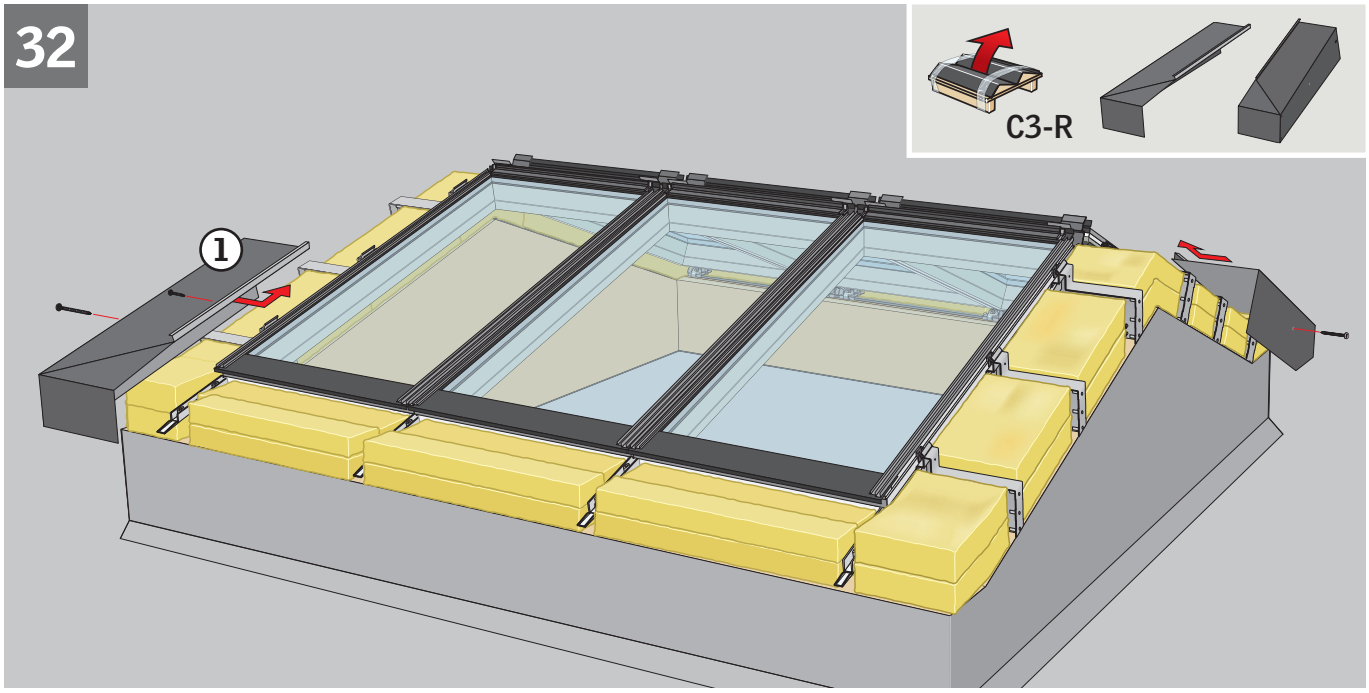
32
C3-R
1

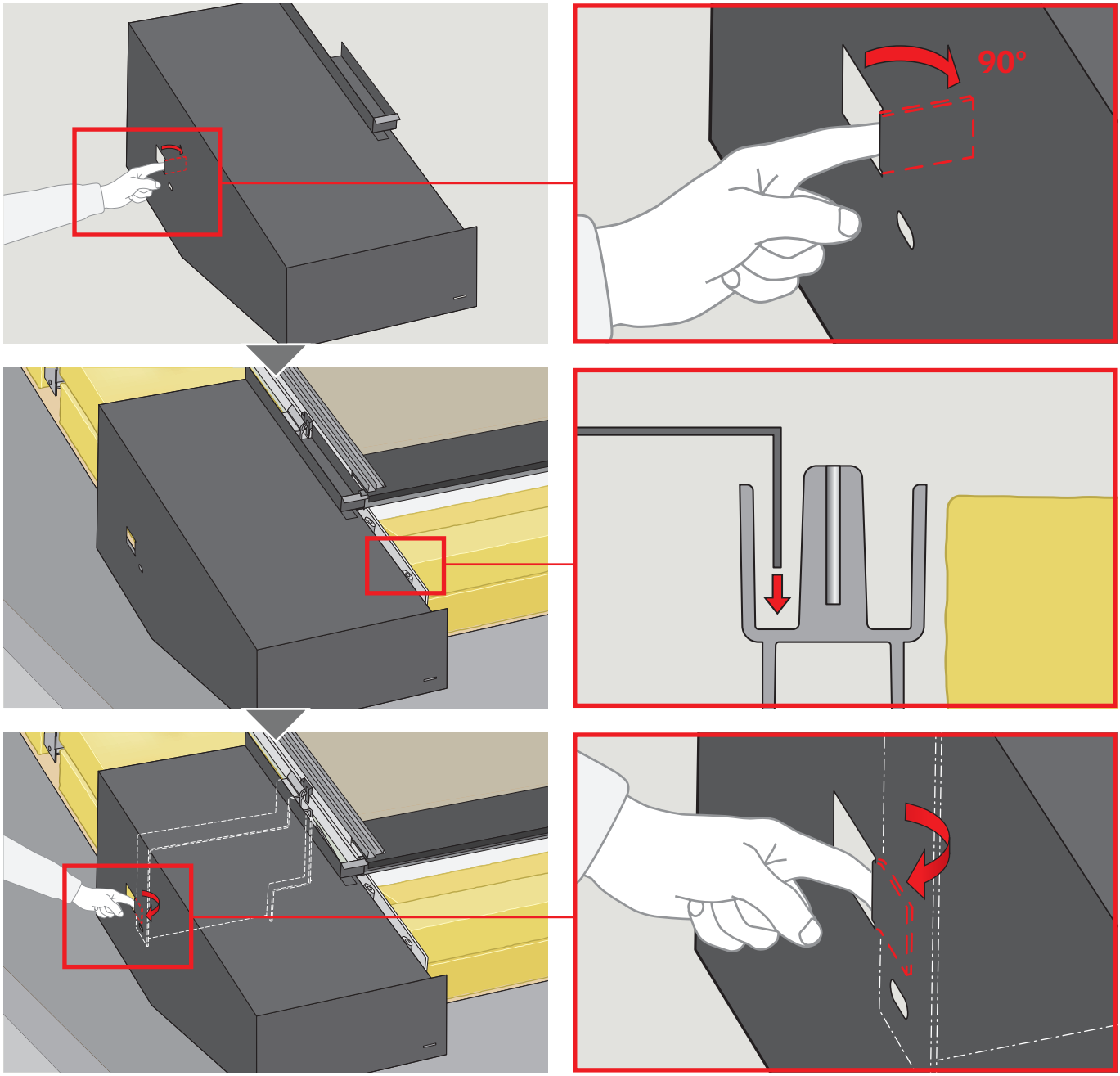
90°

33

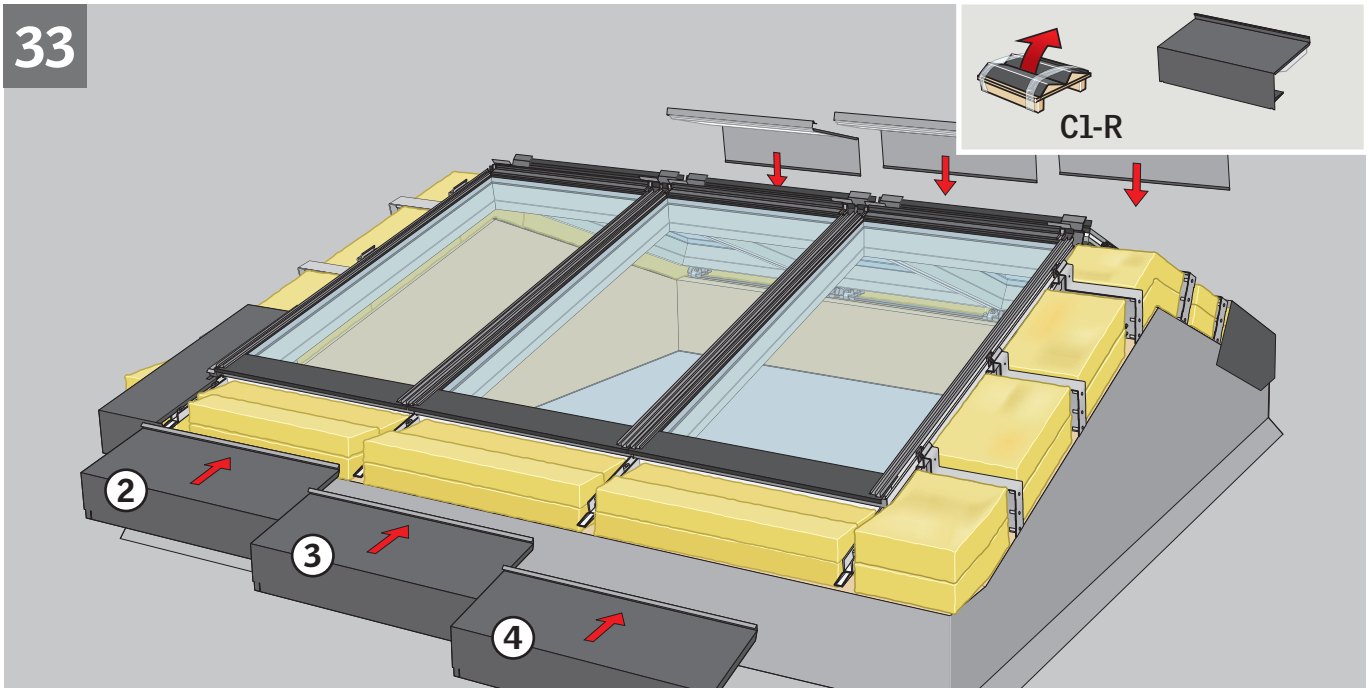

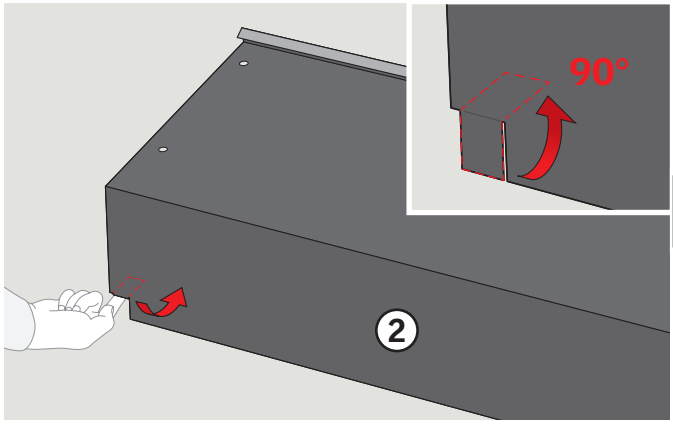

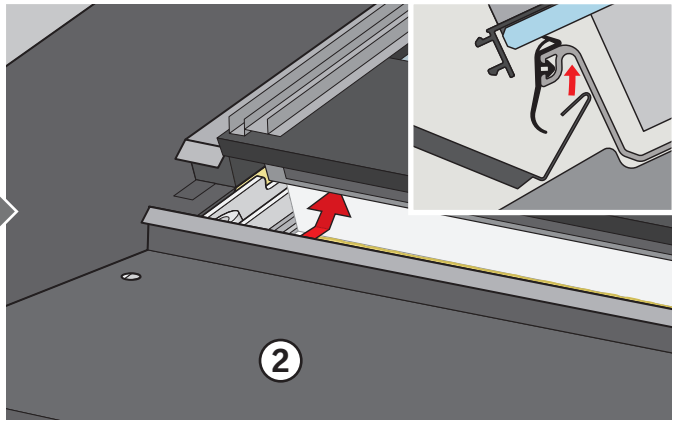

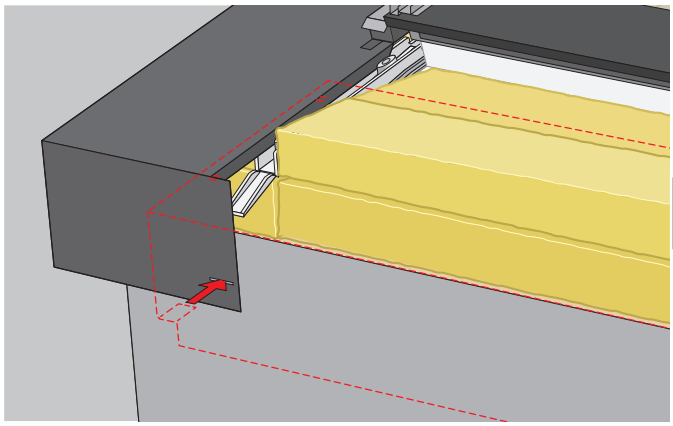

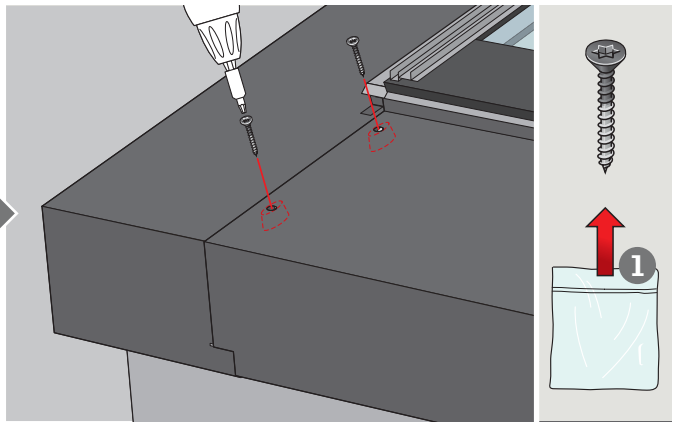

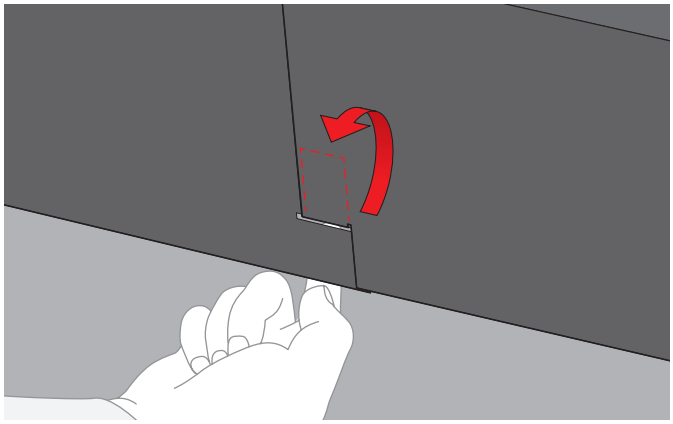

34

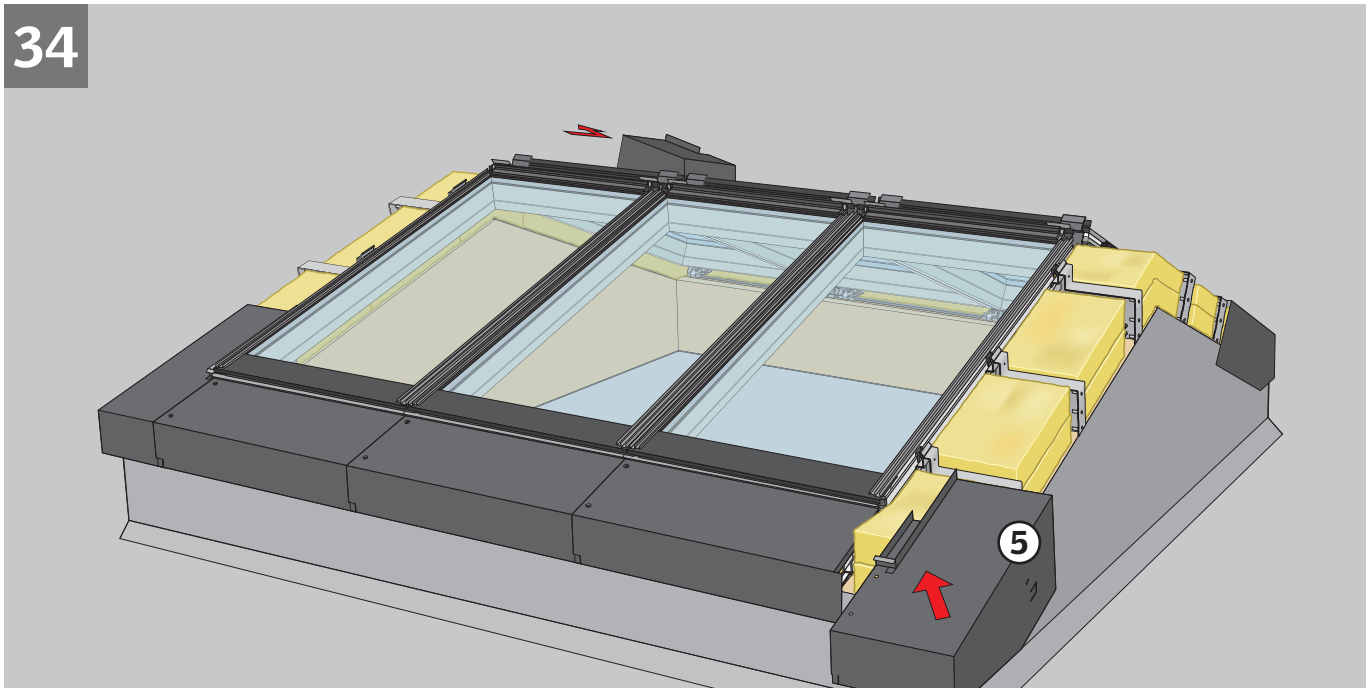

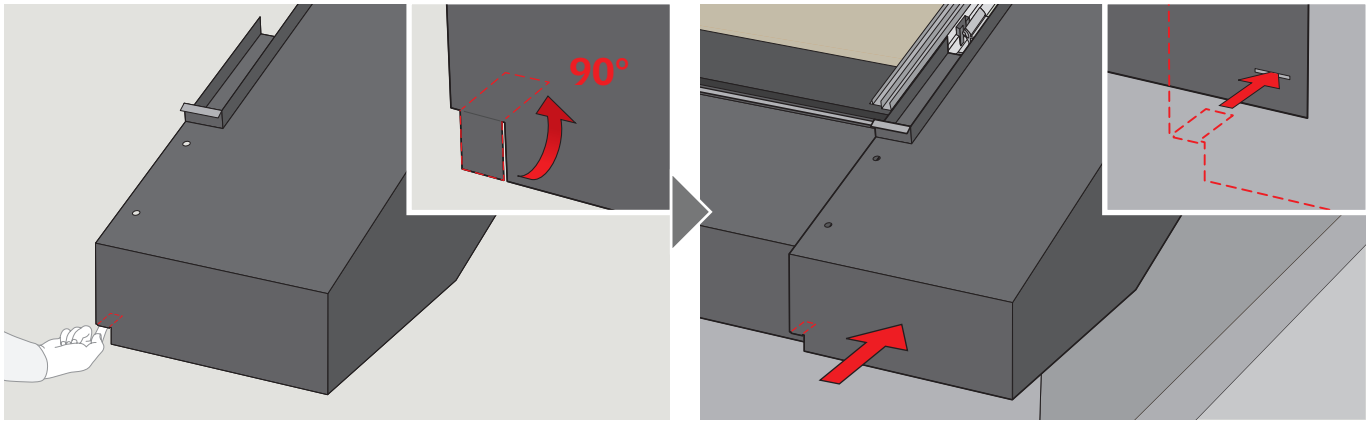

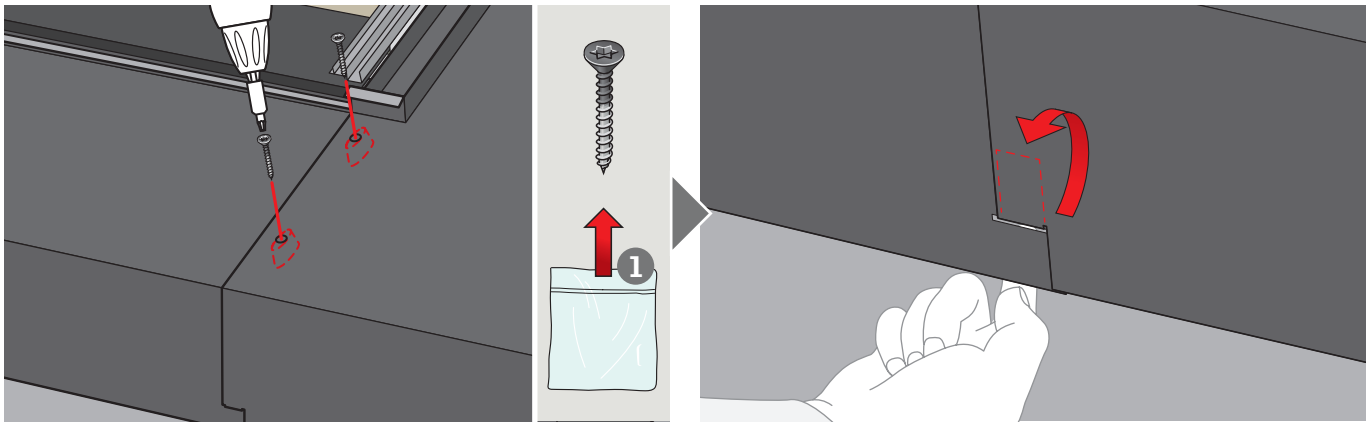

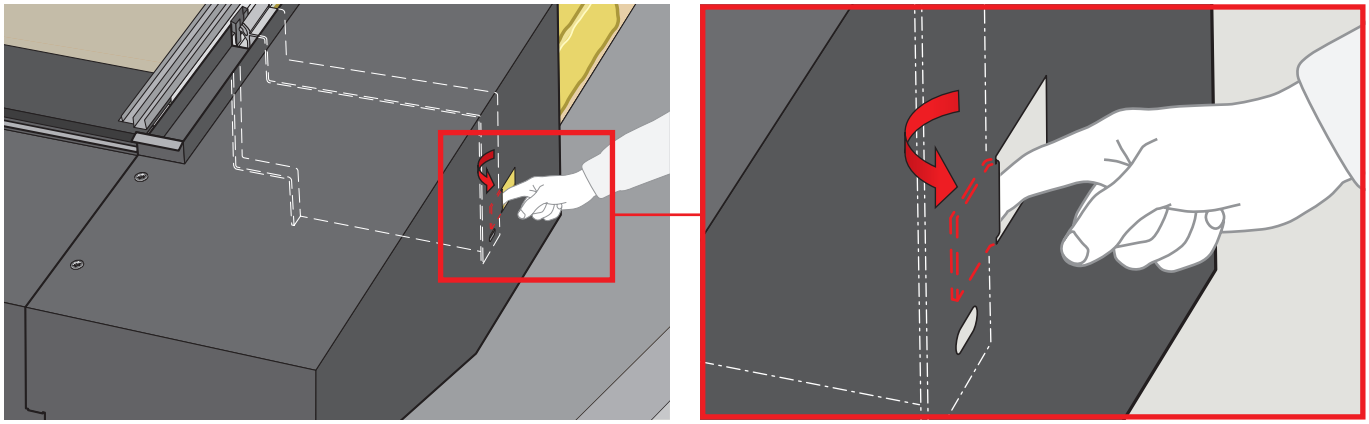

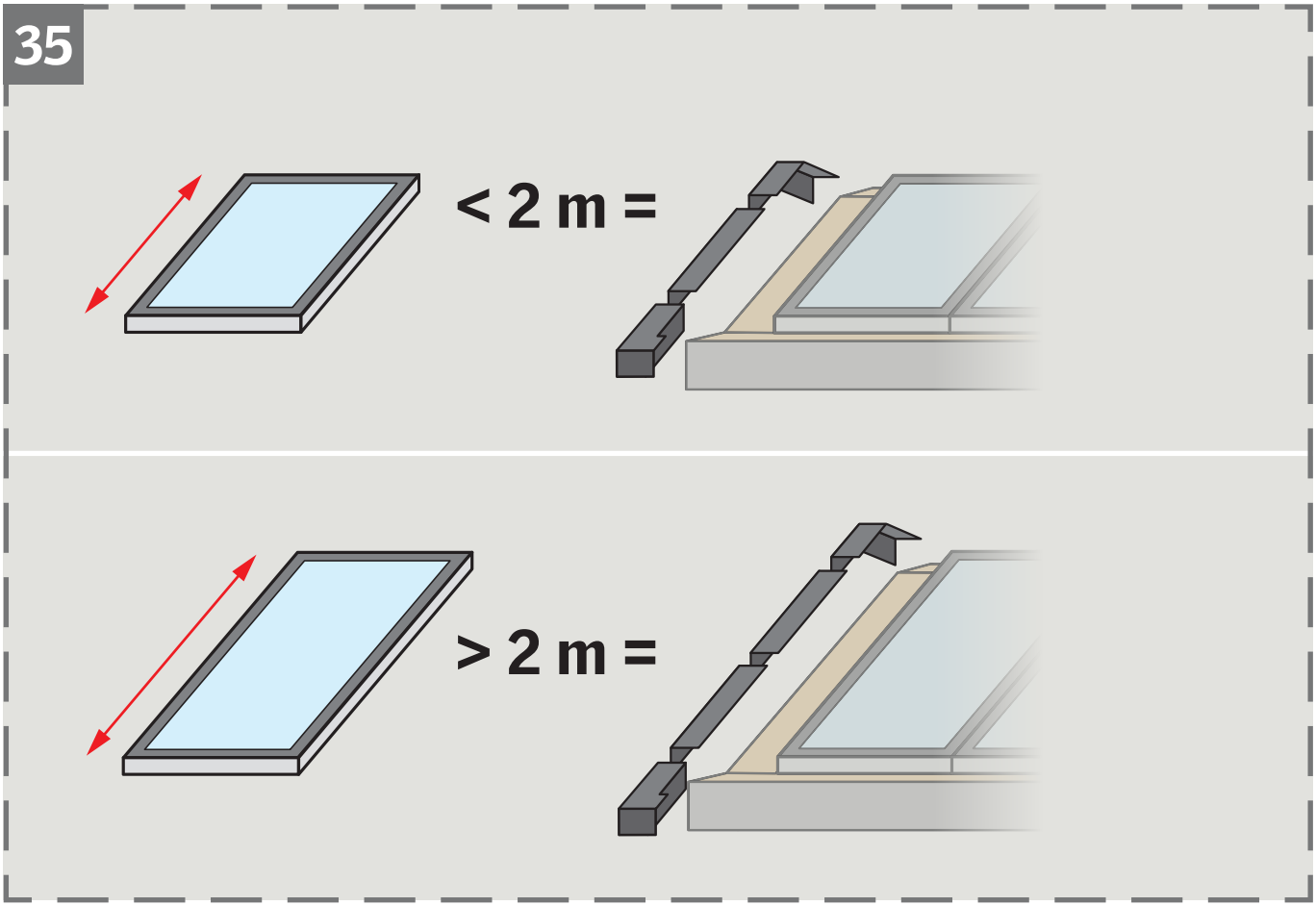
35
< 2 m =
> 2 m =

36

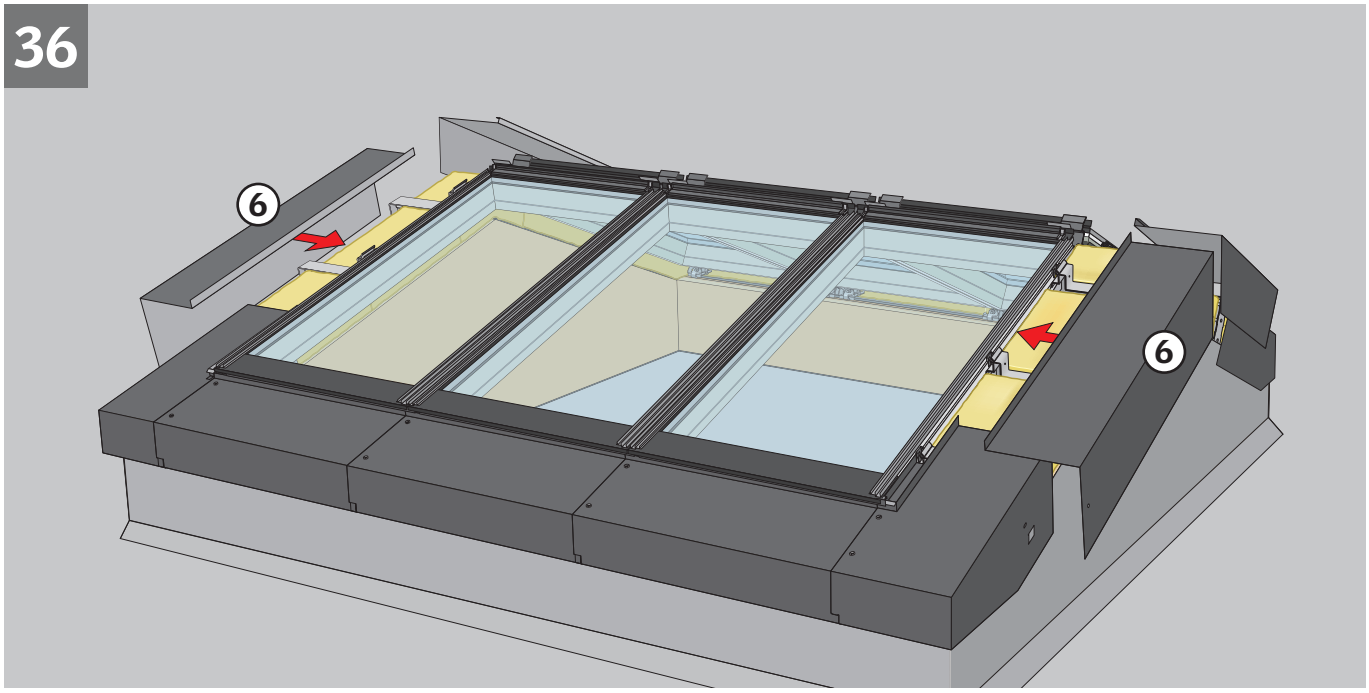

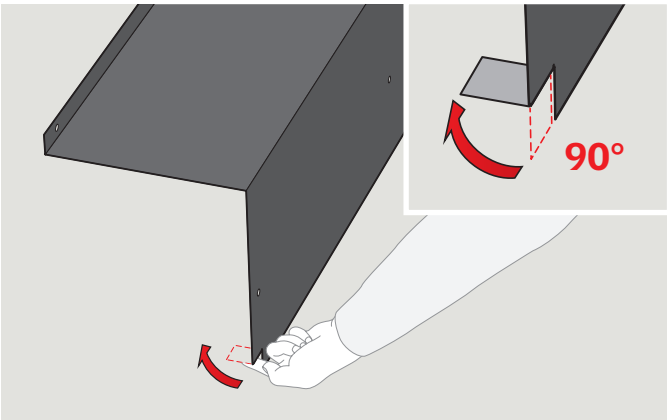

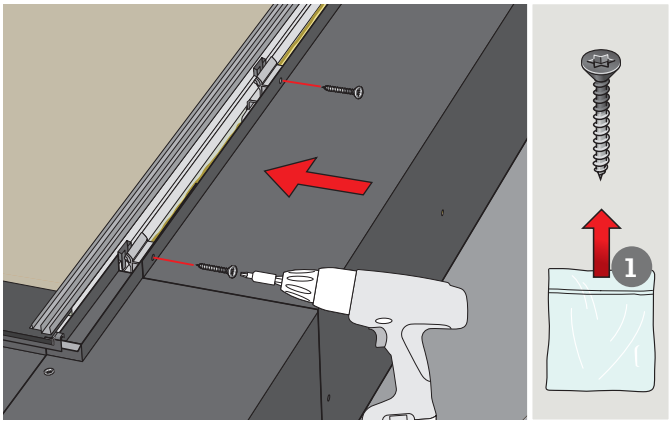

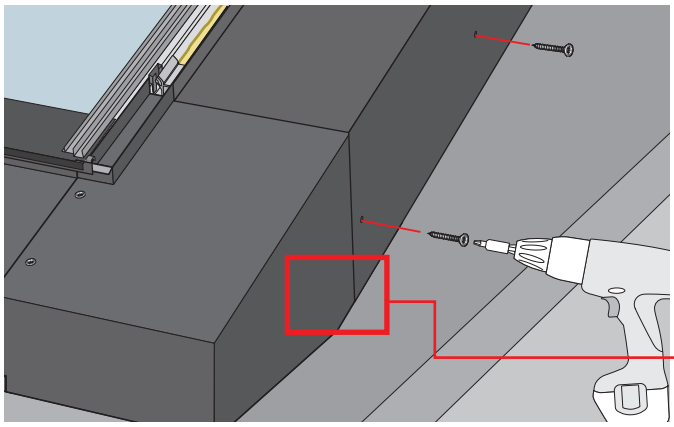

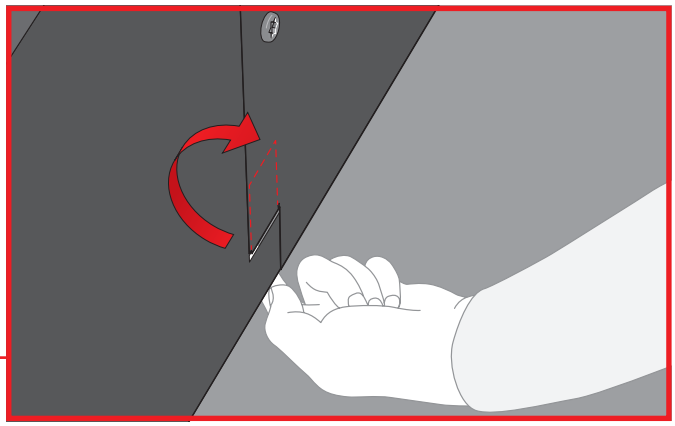

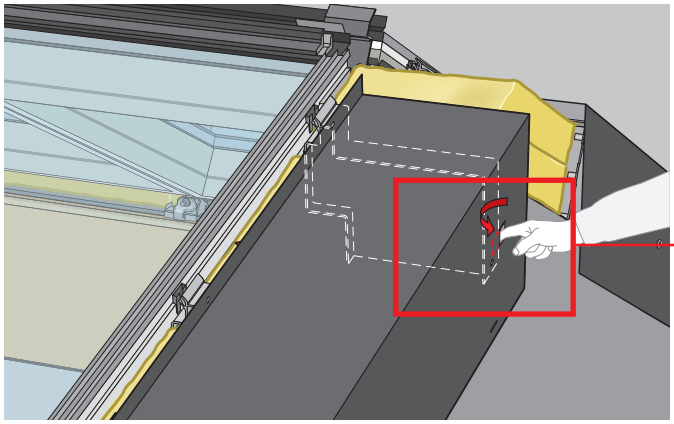

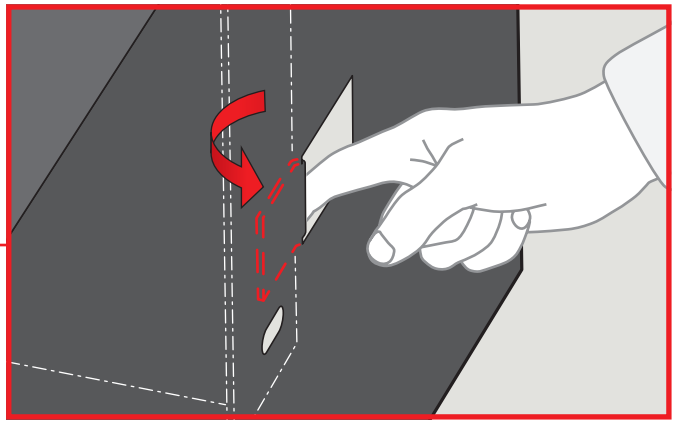

37

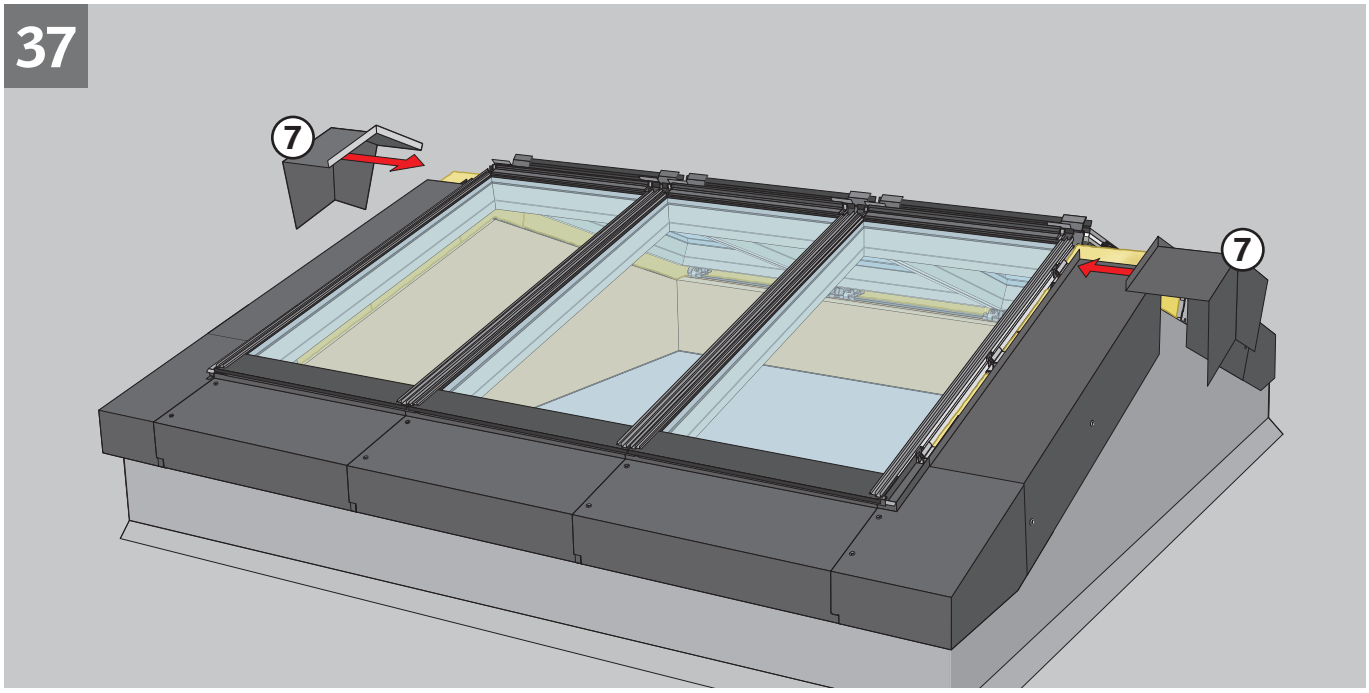

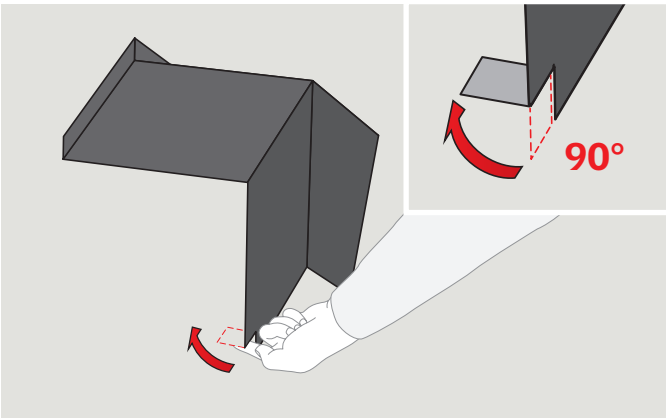

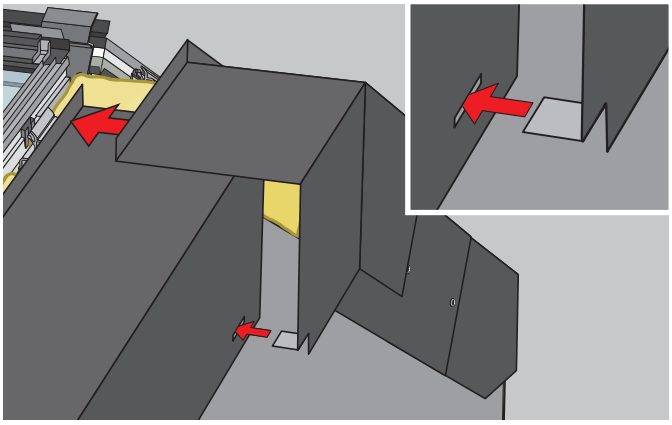

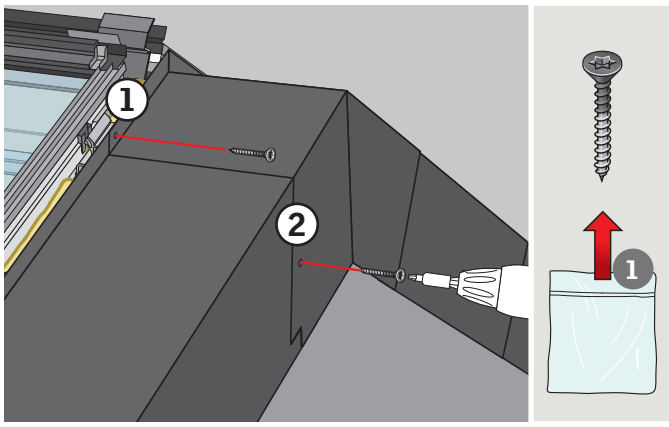

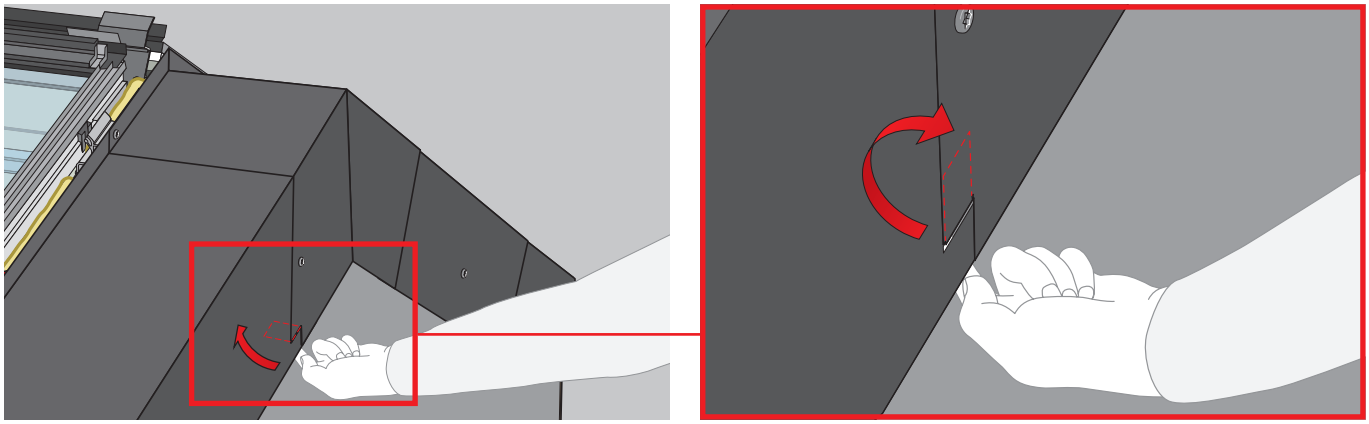

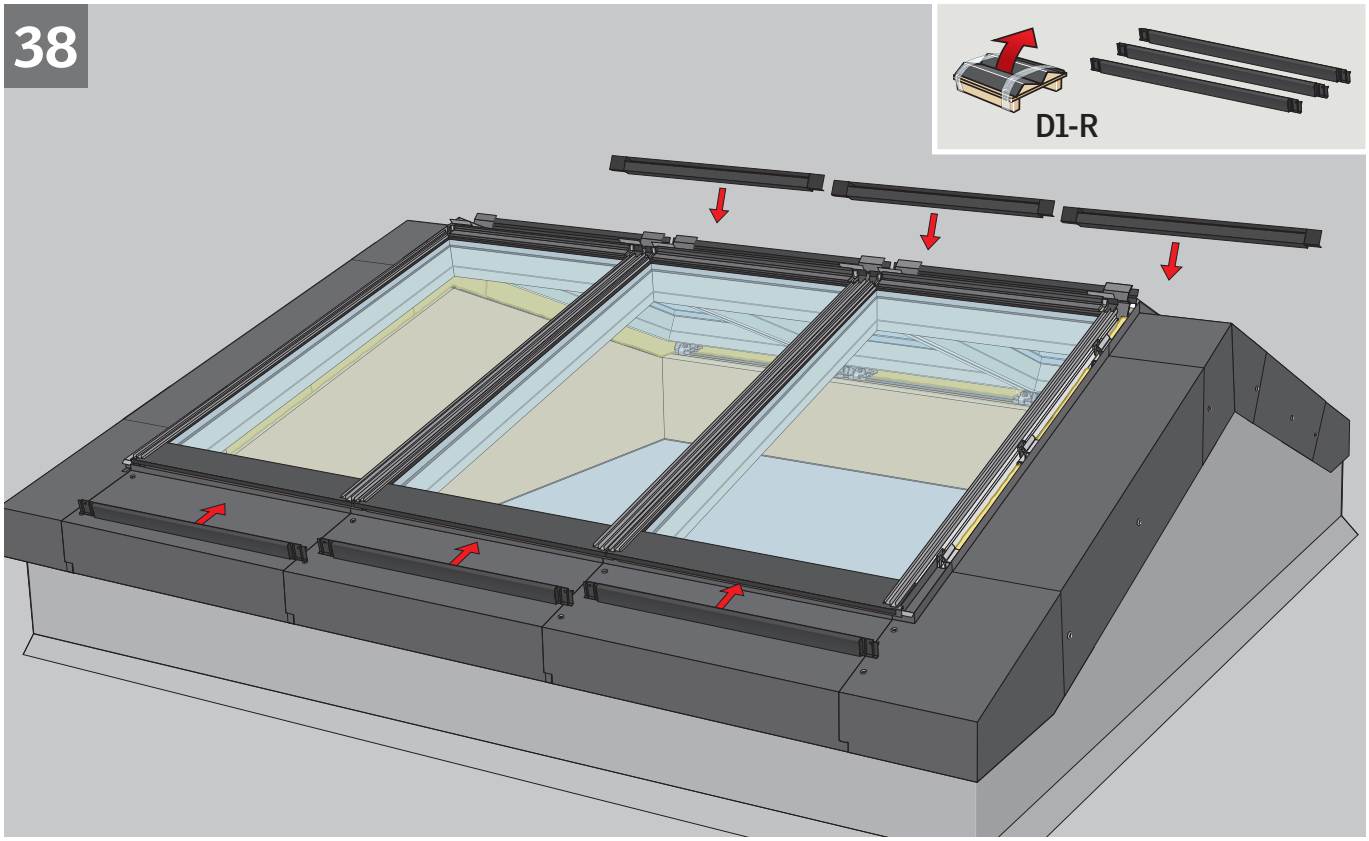
38
D1-R

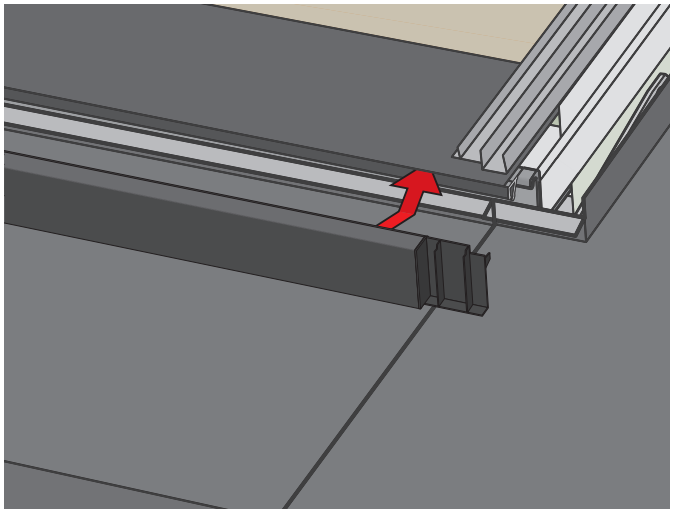

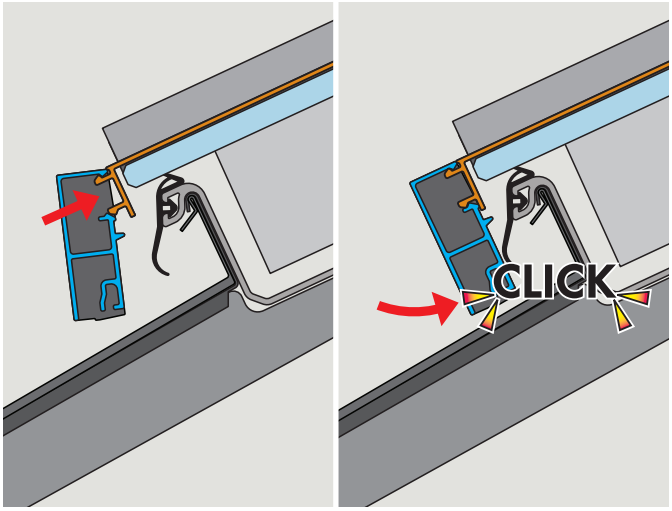
CLICK

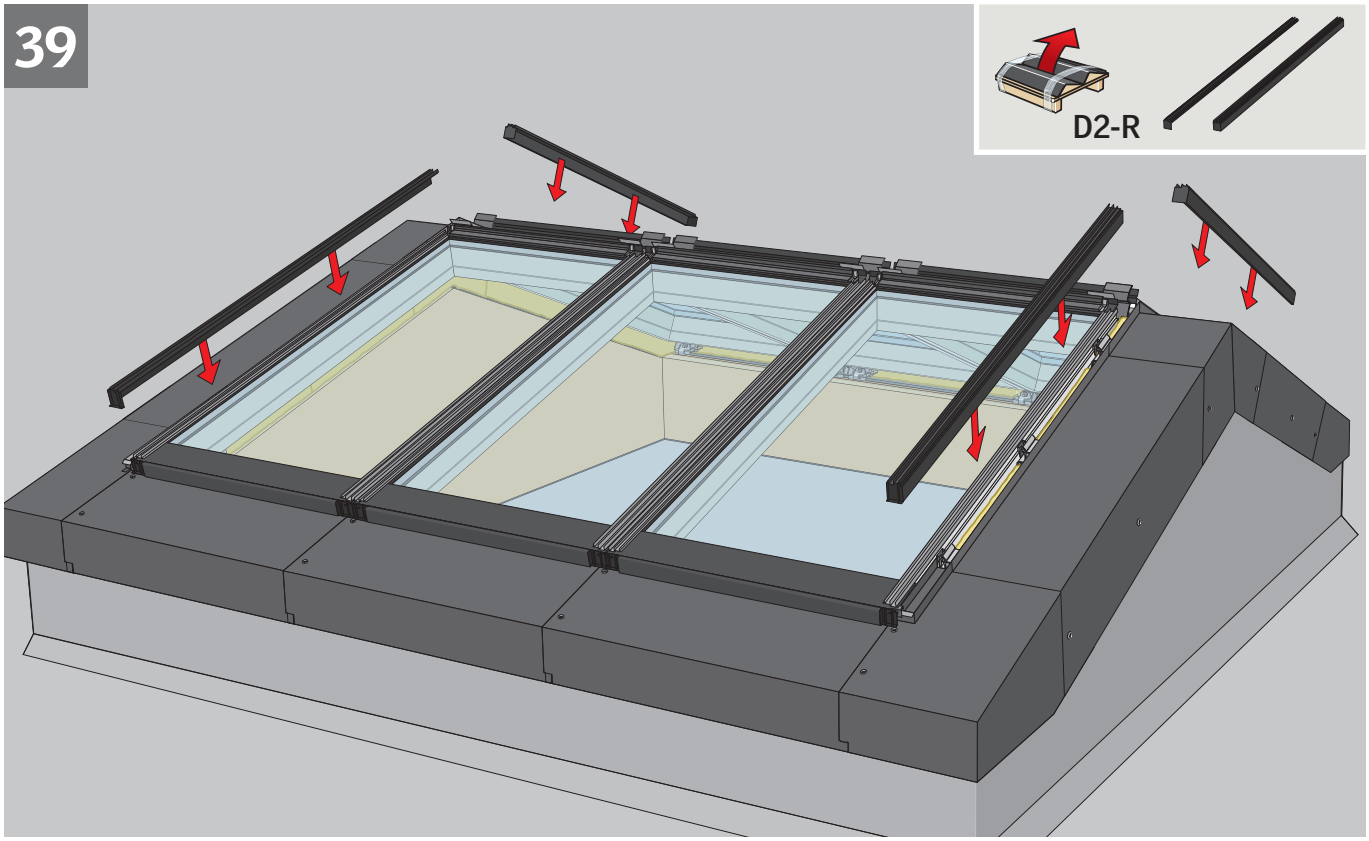
39
D2-R

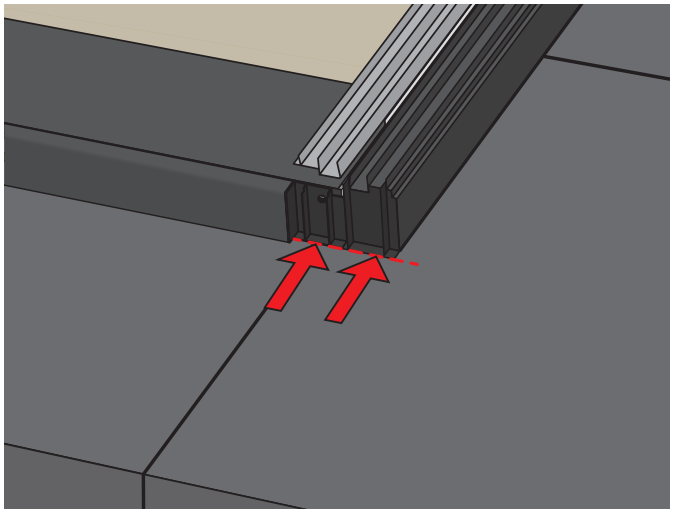

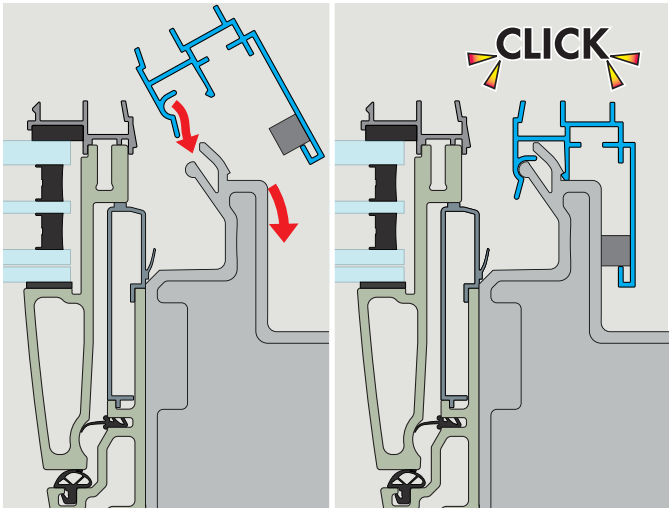
CLICK

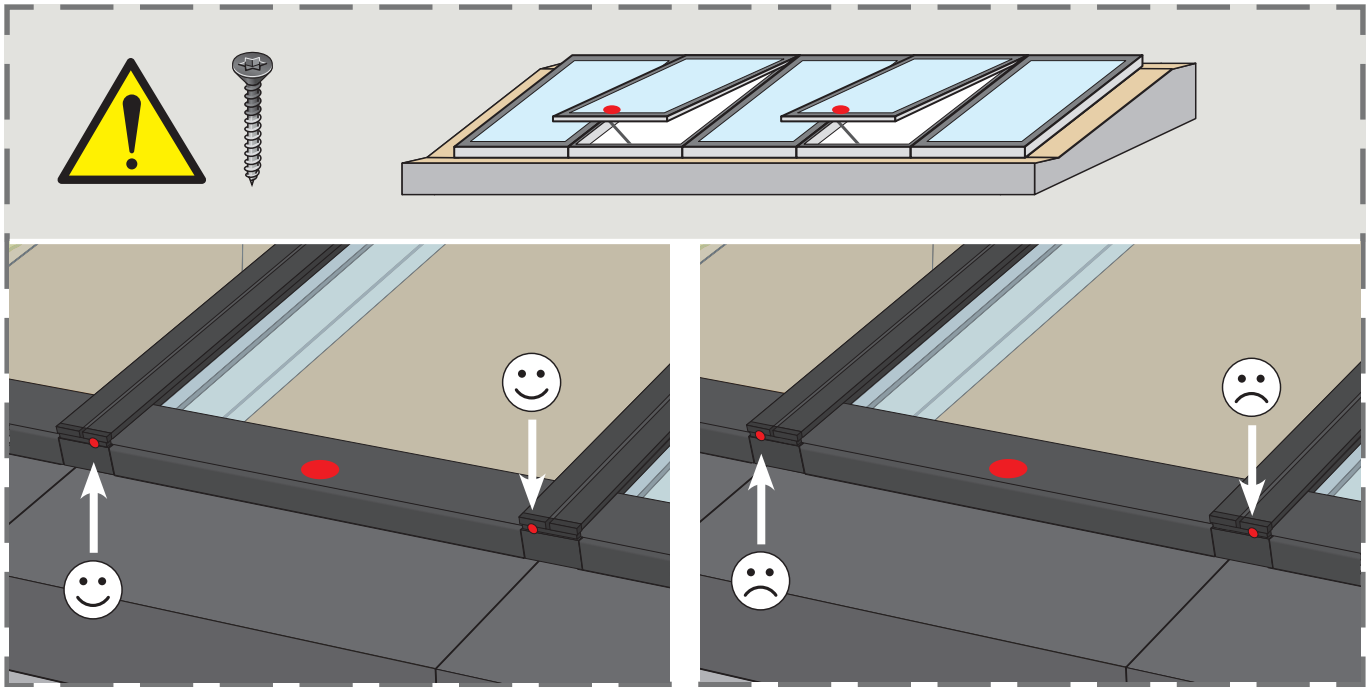

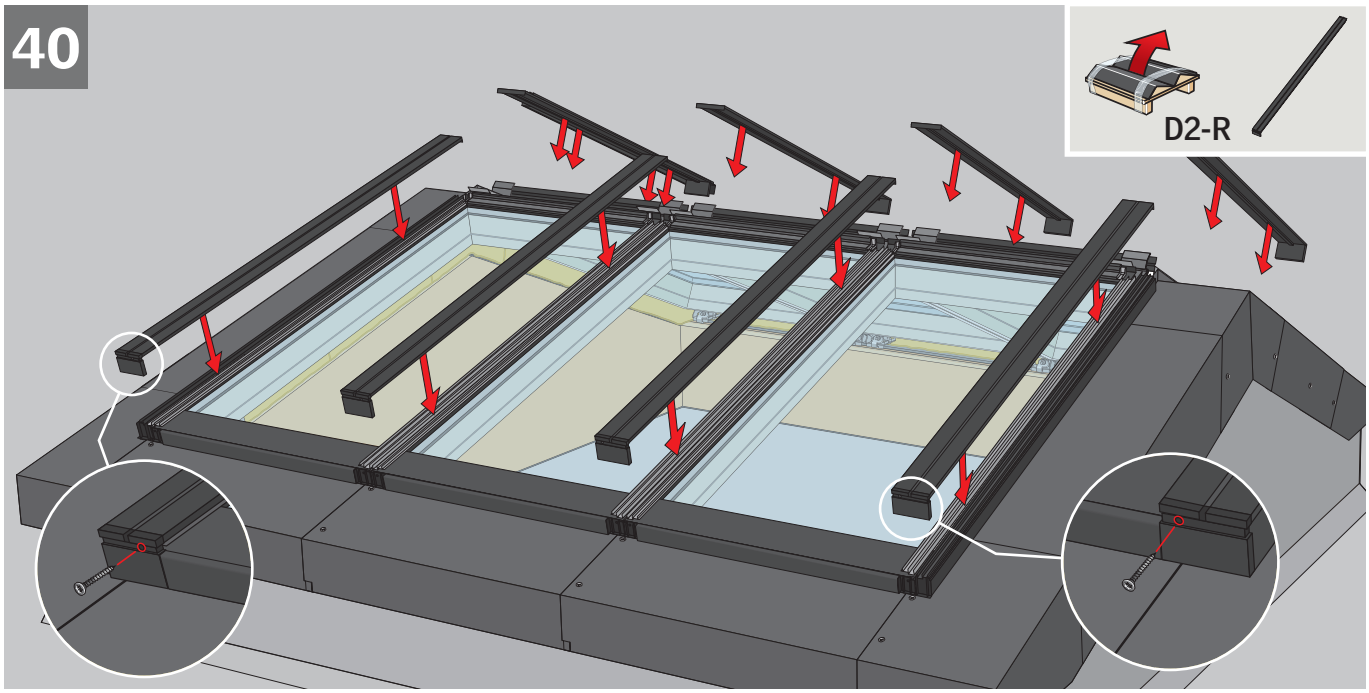
40
D2-R

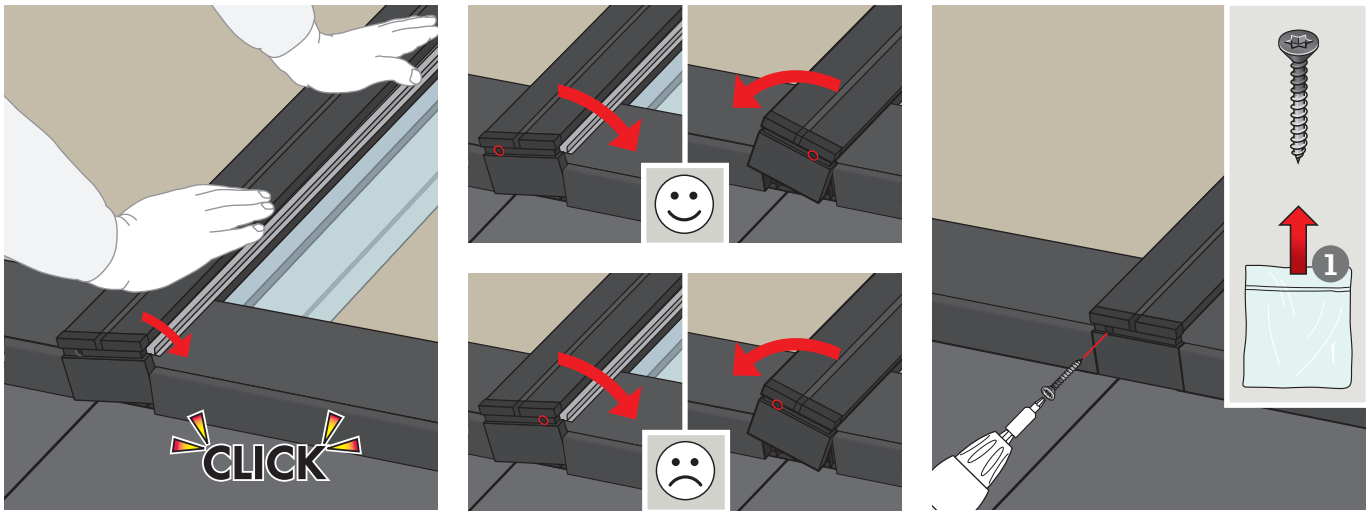
CLICK
1

41

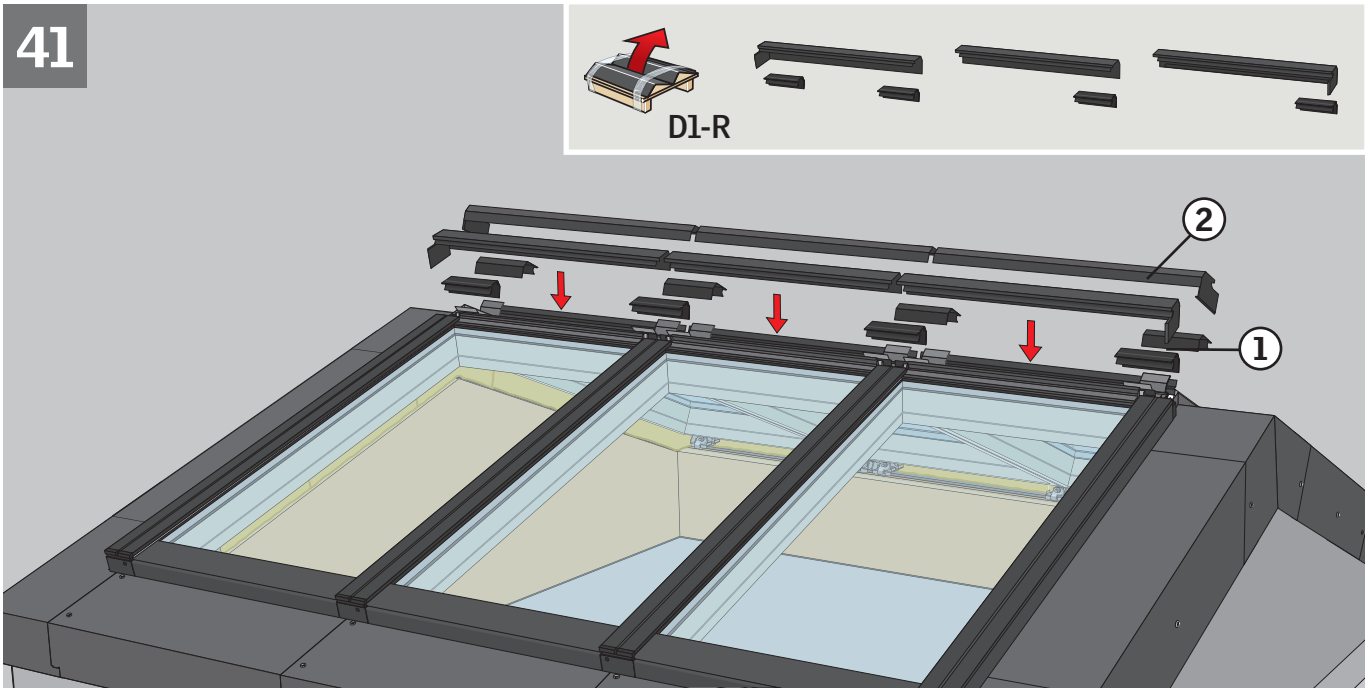

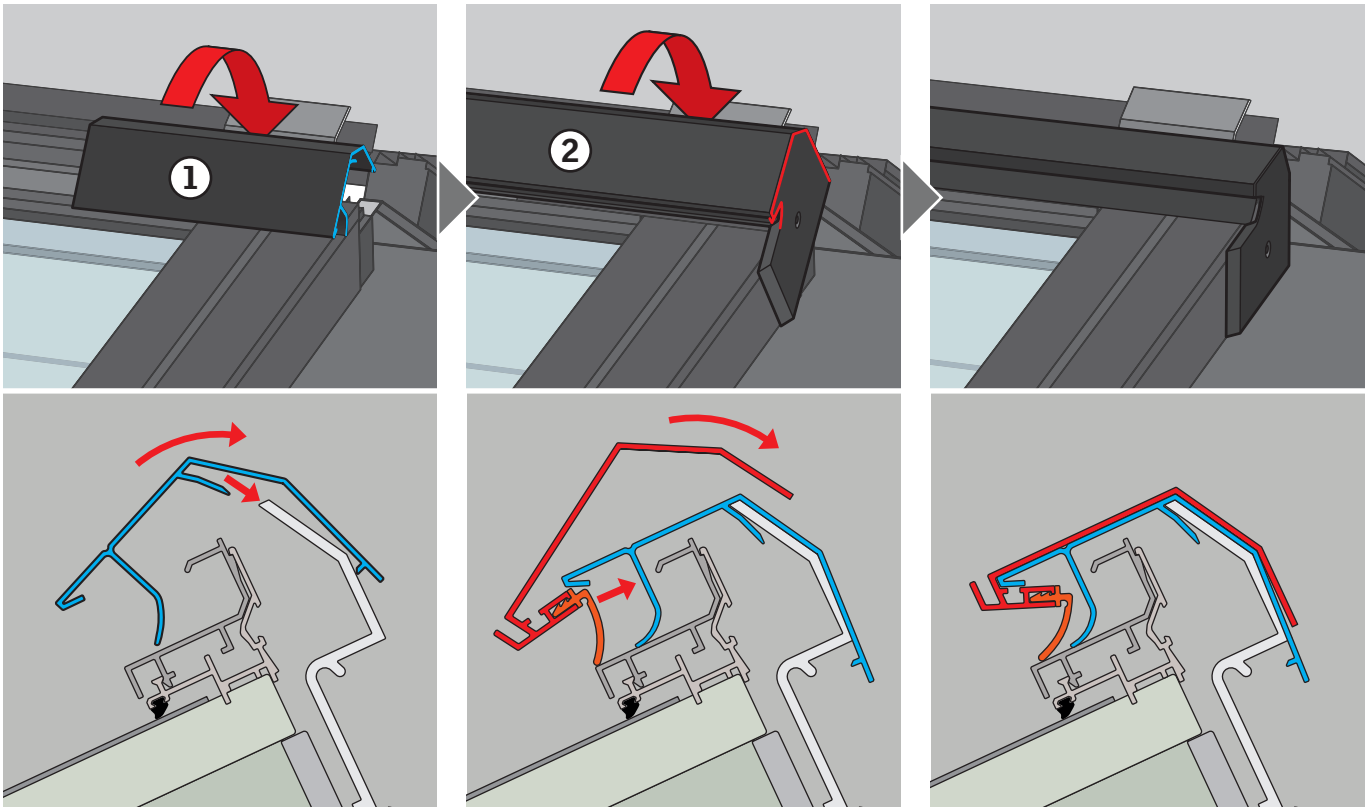

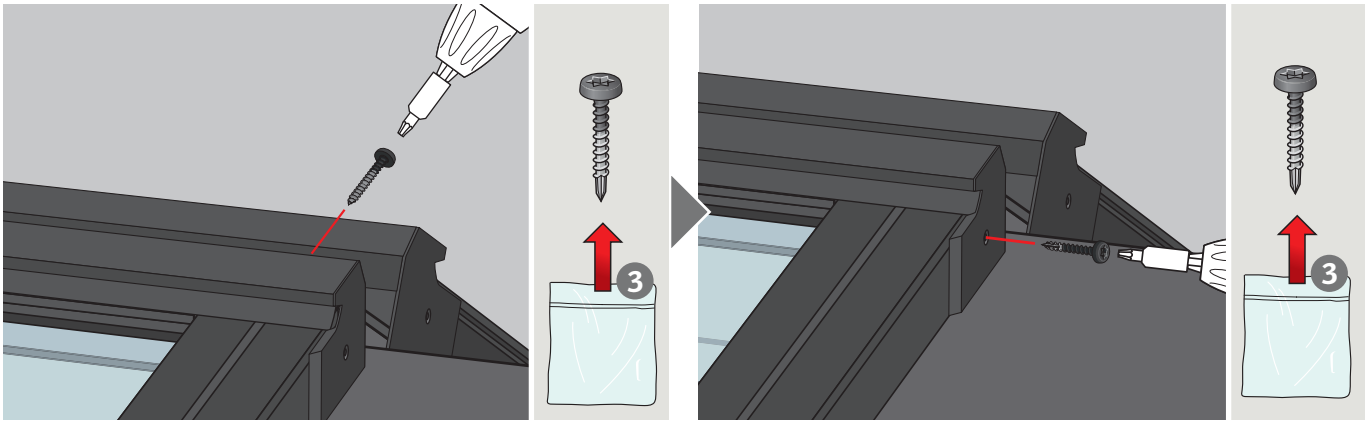

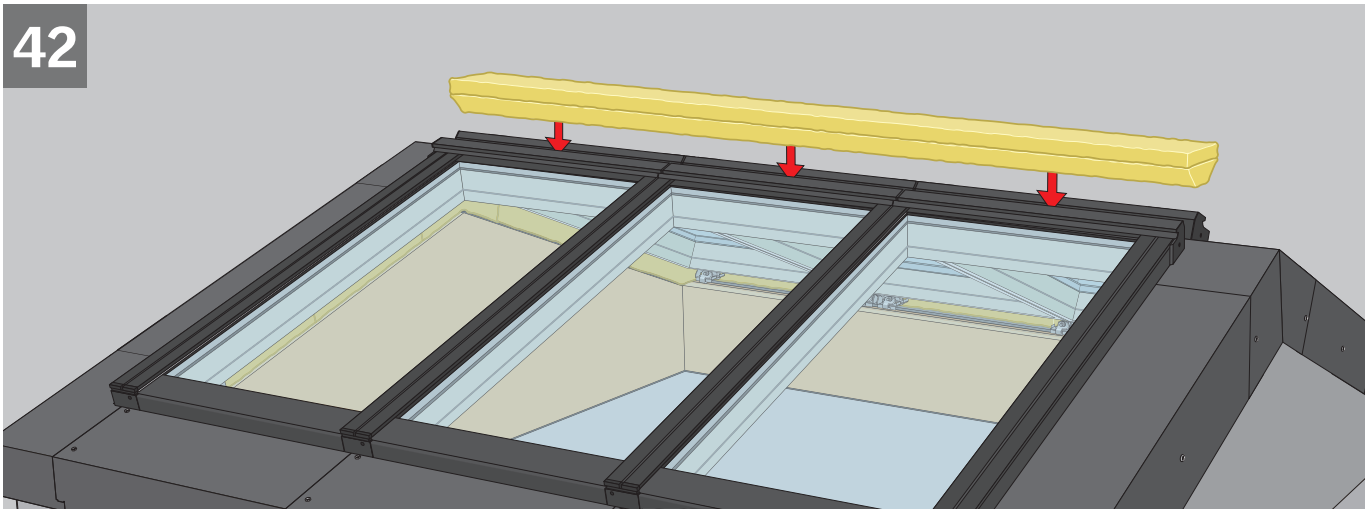
42

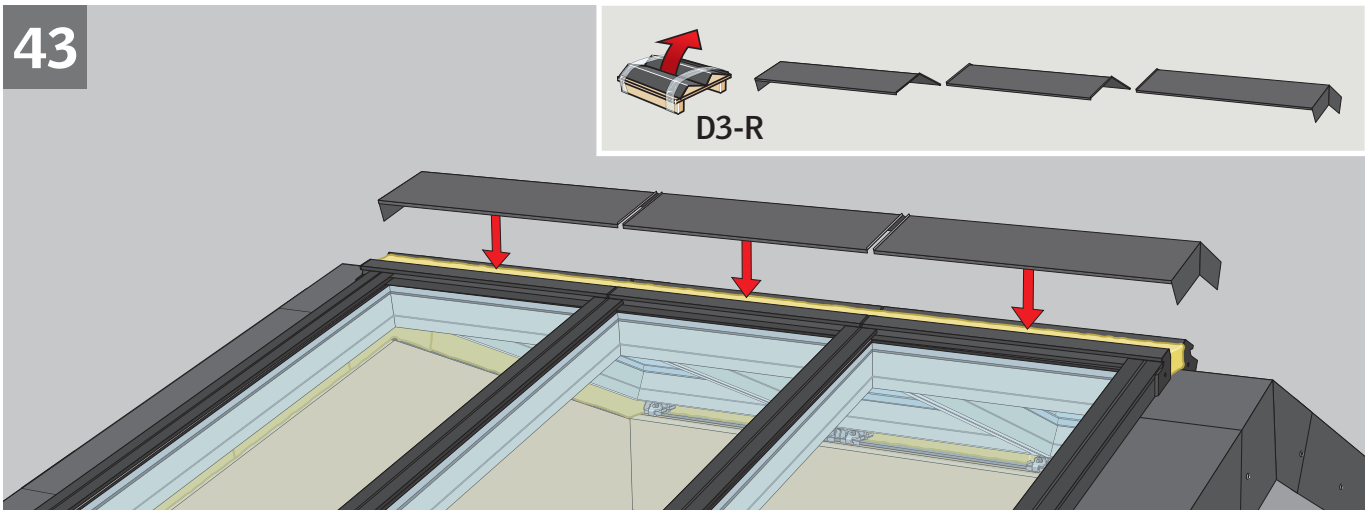
43
D3-R

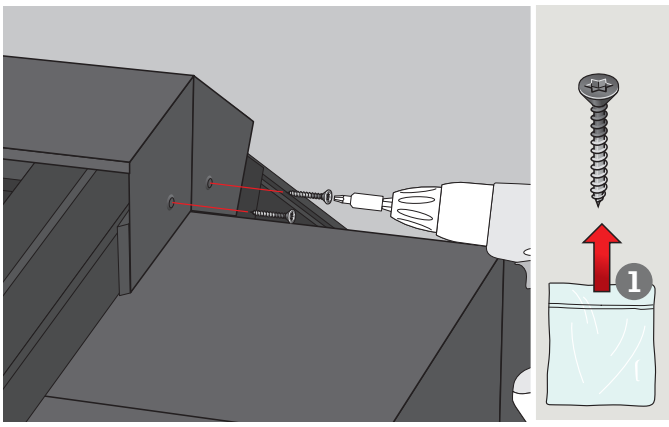
1

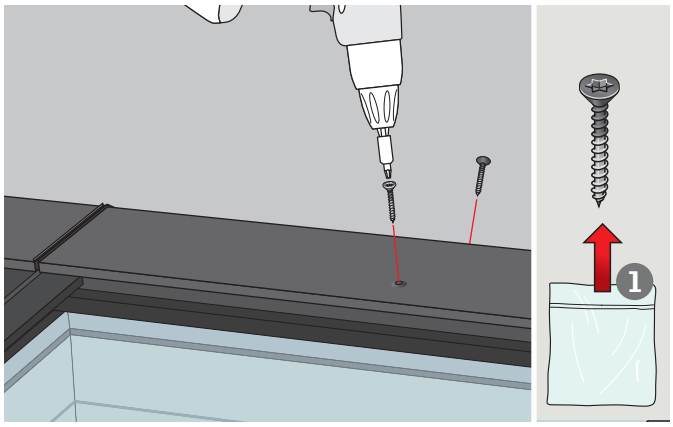
1

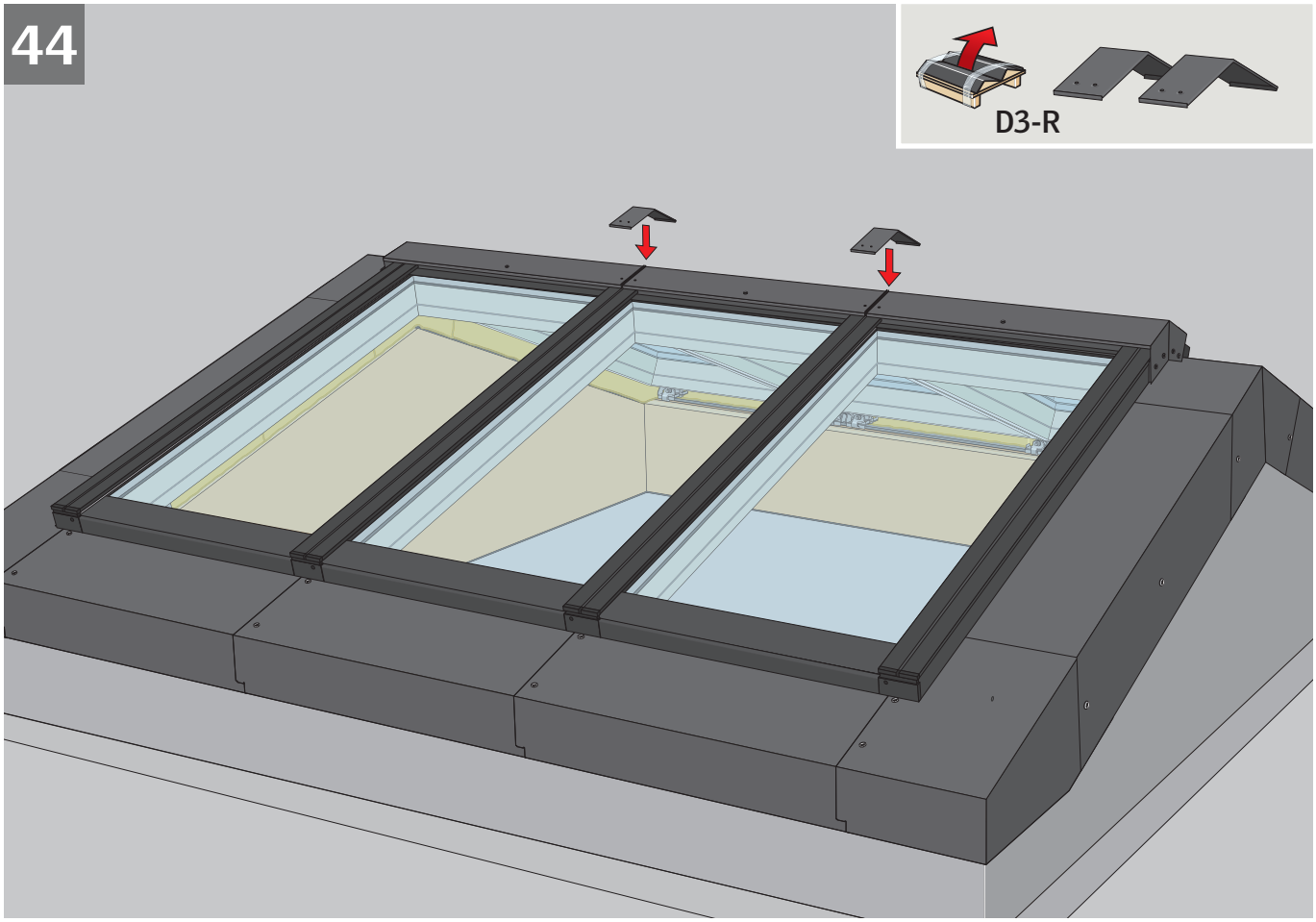
44
D3-R

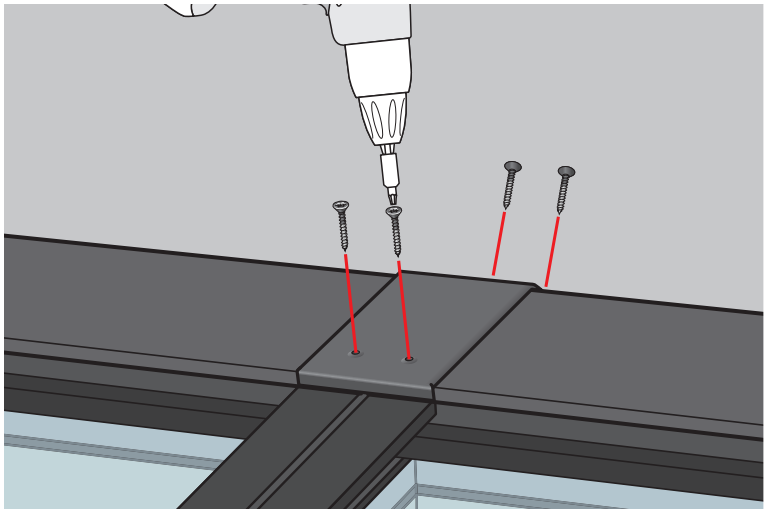

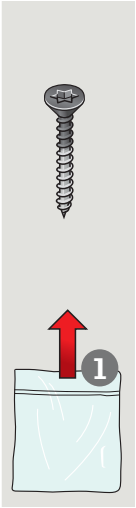
1

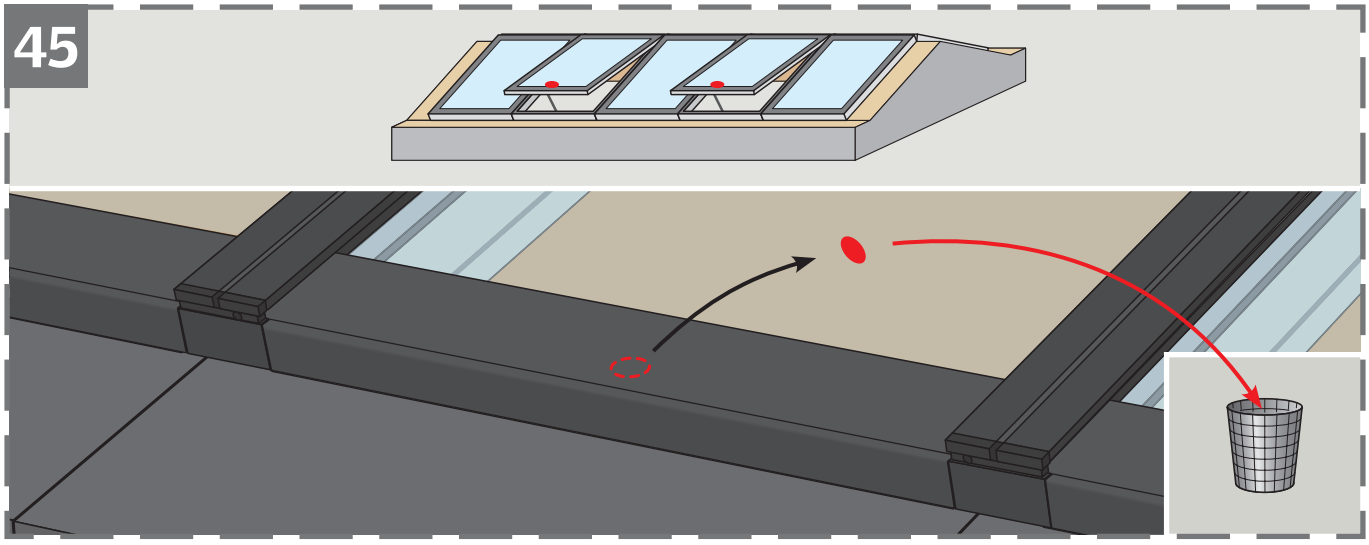
45

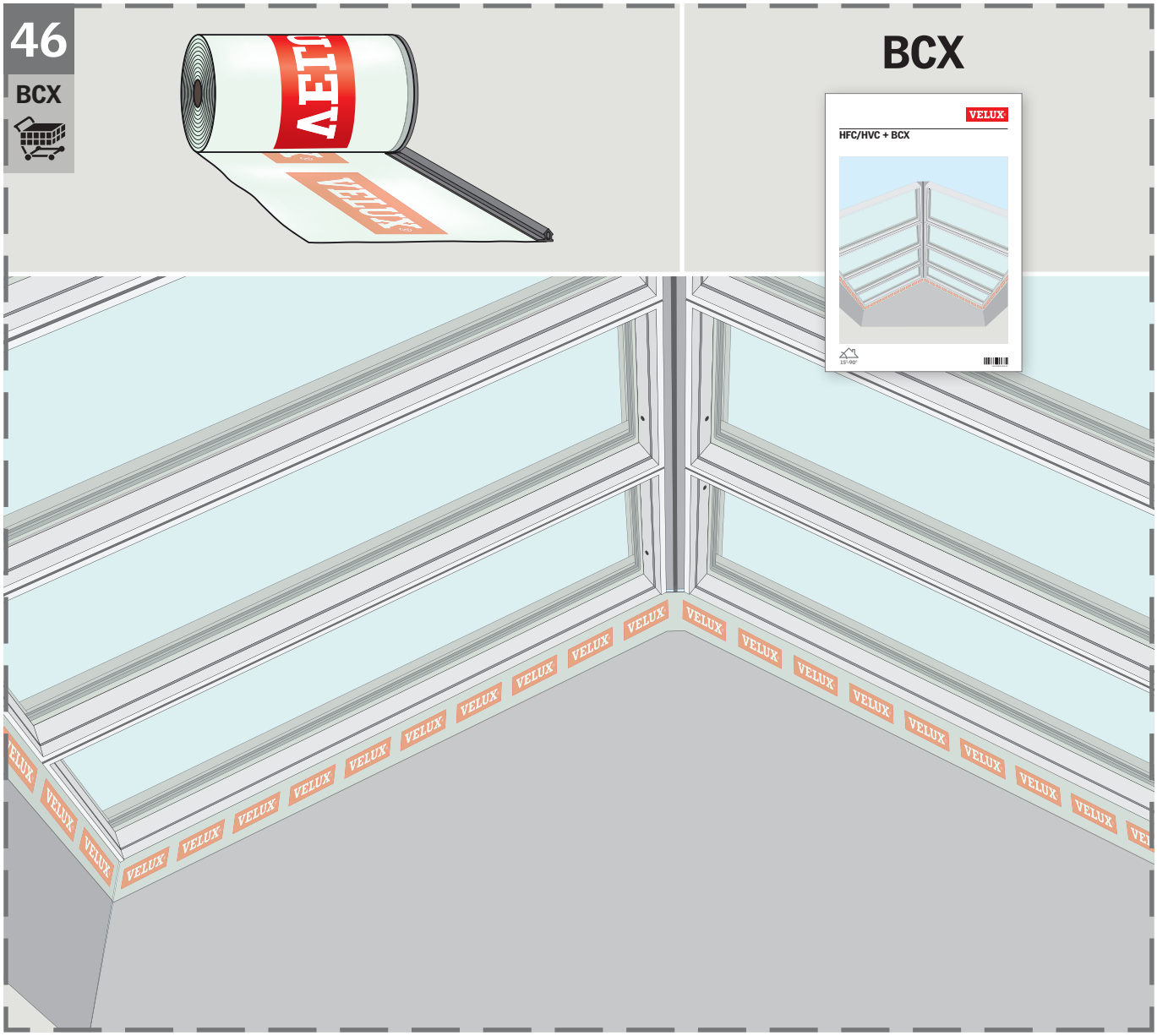
46
BCX
BCX
VELUX
HFC/HVC + BCX
VELUX

AR: VELUX Argentina S.A.
348 4 639944

AT: VELUX Österreich GmbH
02245/32 3 50

AU: VELUX Australia Pty. Ltd.
1300 859 856

BA: VELUX Bosna i Hercegovina d.o.o.
033/626 493, 626 494

BE: VELUX Belgium
(010) 42.09.09

BG: VELUX Bulgaria EOOD
02/955 99 30

BY: FE VELUX Roof Windows
(017) 217 7385

CA: VELUX Canada Inc.
1 800 88-VELUX (888-3589)

CH: VELUX Schweiz AG
062 289 44 45

CL: VELUX Chile Limitada
2 953 6789

CN: VELUX (CHINA) CO. LTD.
0316-607 27 27

CZ: VELUX Česká republika, s.r.o.
531 015 511

DE: VELUX Deutschland GmbH
01806 / 33 33 99
Festnetz: 0,20 €/Anruf
Mobilfunk: max. 0,60 €/Anruf

DK: VELUX Danmark A/S
45 16 45 16

EE: VELUX Eesti OÜ
621 7790

ES: VELUX Spain, S.A.
91 509 71 00

FI: VELUX Suomi Oy
0207 290 800

FR: VELUX France
0821 02 15 15
0,119€ TTC/min

GB: VELUX Company Ltd.
01592 778 225

HR: VELUX Hrvatska d.o.o.
01/5555 444

HU: VELUX Magyarország Kft.
(06/1) 436-0601

IE: VELUX Company Ltd.
01 848 8775

IT: VELUX Italia s.p.a.
045/6173666

JP: VELUX-Japan Ltd.
0570-00-8145

LT: VELUX Lietuva, UAB
(85) 270 91 01

LV: VELUX Latvia SIA
67 27 77 33

NL: VELUX Nederland B.V.
030 - 6 629 629

NO: VELUX Norge AS
22 51 06 00

NZ: VELUX New Zealand Ltd.
0800 650 445

PL: VELUX Polska Sp. z o.o.
(022) 33 77 000 / 33 77 070

PT: VELUX Portugal, Lda
21 880 00 60

RO: VELUX România S.R.L.
0-8008-83589

RS: VELUX Srbija d.o.o.
011 20 57 500

RU: ZAO VELUX
8 800 200 7520

SE: VELUX Svenska AB
042/20 83 80

SI: VELUX Slovenija d.o.o.
01 724 68 68

SK: VELUX Slovensko, s.r.o.
(02) 33 000 555

TR: VELUX Çatı Pencereleri
Ticaret Limited Şirketi
0 216 302 54 10

UA: VELUX Ukraina TOV
(044) 2916070

US: VELUX America Inc.
1-800-88-VELUX

www.velux.com

INSTALLATION INSTRUCTIONS FOR VELUX MODULAR SKYLIGHT - HFC/HVC + ERC. ©2012, 2015 VELUX GROUP ®VELUX AND THE VELUX LOGO ARE REGISTERED TRADEMARKS USED UNDER LICENCE BY THE VELUX GROUP